ICC-ES Evaluation Report

ESR-1255

Reissued May 1, 2010

This report is subject to re-examination in two years.

www.icc-es.org | (800) 423-6587 | (562) 699-0543 *A Subsidiary of the International Code Council®*

DIVISION: 07—THERMAL AND MOISTURE PROTECTION
Section: 07815—Flexible Blanket Fireproofing

REPORT HOLDER:

3M FIRE PROTECTION PRODUCTS
3M CENTER, BUILDING 223-2N-20
ST. PAUL, MINNESOTA 55144-1000
(651) 733-0973
www.3m.com/firestop

EVALUATION SUBJECT:

3M FIRE BARRIER DUCT WRAP 615+ BLANKET FOR GREASE DUCT ENCLOSURE ASSEMBLIES

1.0 EVALUATION SCOPE

Compliance with the following codes:

- 2009 *International Building Code®* (IBC)
- 2009 *International Mechanical Code®* (IMC)
- 2009 IAPMO *Uniform Mechanical Code* (UMC)
- Other Codes (see Section 8.0)

Properties evaluated:

Durability

- Fire resistance
- Noncombustibility
- Surface burning characteristics

2.0 USES

The 3M Fire Barrier Duct Wrap 615+ is a flexible blanket used to construct zero-clearance, fire-resistance-rated grease duct enclosure assemblies serving Type I kitchen hoods. The duct wrap material complies with Section 506.3.10.2 of the IMC and Sections 507.2.6 and 510.7.3.1 of the UMC, and is an alternative to the one- and two-hour fire-resistance-rated enclosure requirements of IBC Section 708.4 and Section 510.7.1 of the UMC, when installed in accordance with Section 4.0.

3.0 DESCRIPTION

3.1 Materials:

3.1.1 3M Fire Barrier Duct Wrap 615+ Blanket: The blanket consists of a monolithic layer of proprietary soluble, vitreous alkaline earth oxide (calcium- silicone-, magnesium-oxide) fiber material encapsulated in a foil scrim, having a total nominal thickness of $1^1/_2$ inches (38mm). It is packaged in rolls 25 feet (7620mm) long and either 24 inches (610 mm) or 48 inches (1219 mm) wide. The blankets have a nominal density of 6 pcf (96 kg/m^3) and have a flame-spread index of 25 or less and a smoke-developed index of 50 or less when tested in accordance with ASTM E 84 (UBC Standard 8-1). The 615+ blanket is classified as noncombustible when tested in accordance with ASTM E 136.

3.1.2 Banding Material: Banding material must be minimum $^1/_2$-inch-wide (12.7 mm), 0.015-inch-thick (3.8 mm) stainless steel or carbon steel strap. Tools used for banding are a hand tensioner and a clip seal crimping tool.

3.1.3 Duct System: The duct must comply with Section 506.3 of the IMC or Sections 510.1, 510.4 or 510.5 of the UMC, as applicable. Under the IMC, grease ducts serving Type I hoods must be constructed either of minimum 0.0575-inch-thick (1.463 mm) (No. 16 gage) steel or of stainless steel at least 0.045 inch (1.14 mm) thick. Under the UMC, grease ducts serving Type I hoods must be constructed either of minimum 0.054-inch-thick (1.37 mm) (No. 16 MSG) steel or of stainless steel not less than 0.043 inch (1.09 mm) (No. 18 MSG) thick. Joints and seams of grease ducts must comply with Section 506.3.2 of the IMC, or Section 510.5.2 of the UMC. Duct supports must comply with Section 506.3.3 of the IMC, or UMC Sections 510.1.7 and 510.5.1, as applicable, and Section 4.2.3 of this report. Maximum duct size is 48 inches by 24 inches (1219 mm by 610 mm).

3.1.4 Sealants: 3M Fire Barrier 1000 N/S Silicone Sealant (Non-Slump) and 3M Fire Barrier 1003 S/L Silicone Sealant (Self-Leveling) are ready-to-use, one-component silicone elastomers used in through-penetration fire-stop assemblies described in Section 4.2.4. The sealants are packaged in cartridges and have a shelf life of 12 months from date of packaging when stored in a clean, dry area with temperatures between 40°F and 90°F (4.4°C and 32.2°C).

3.1.5 Fire Barrier Grease Duct Access Door: The rectangular prefabricated access doors are provided in three sizes: 12 inches by 8 inches (305 mm by 203 mm), 14 inches by 10 inches (356 mm by 254 mm) and 22 inches by 22 inches (559 mm by 559 mm). The access door assembly consists of the 3M access door, four $^1/_4$-inch-diameter (6.4 mm) threaded extension rods, three layers of the 615+ blanket, a No. 16 gage cover plate, wing nuts and washers.

ICC-ES Evaluation Reports are not to be construed as representing aesthetics or any other attributes not specifically addressed, nor are they to be construed as an endorsement of the subject of the report or a recommendation for its use. There is no warranty by ICC Evaluation Service, Inc., express or implied, as to any finding or other matter in this report, or as to any product covered by the report.

Copyright © 2010

4.0 INSTALLATION

4.1 General:

The Duct Wrap 615+ wrap materials are installed with zero clearance from the ducts, and may be installed with zero clearance from the insulating material to combustible construction. Grease ducts protected with Duct Wrap 615+ are permitted to penetrate nonfire-resistance-rated wall, floor-ceiling and roof-ceiling assemblies, provided the duct is protected from the point of penetration in accordance with this report. The systems are also permitted to penetrate fire-resistance-rated assemblies when the through-penetration is protected in accordance with Section 4.2.4 of this report. The systems comply with the requirements of Section 602.2.1 of the IMC, and Section 602.2 of the UMC for installation in plenums.

4.2 Two-hour Fire-resistance-rated Enclosure Assembly:

4.2.1 Enclosure Assembly: The duct must be installed in accordance with Section 506.3.8 of the IMC or Sections 510.1, 510.4 or 510.5 of the UMC, as applicable. Ducts must have a maximum 48-inch-by-24-inch (610 mm by 1219 mm) cross-sectional opening. A total of two layers of blanket material is installed around the grease duct, using one of the four overlap techniques illustrated in Figure 1. Adjacent blankets on the inside layer are installed with either tight butt-joints between blankets or 3-inch (76 mm) perimeter and longitudinal overlaps. Edge joints of the second layer must be offset $10^1/_2$ inches (267 mm) from those of the first layer. The second layer of blanket material must have minimum 3-inch (76 mm) perimeter and longitudinal overlaps. Before the insulation is applied on ducts of 24 inches and larger, 7-inch-long (178 mm), No. 12 gage, copper-coated, mild steel impaling pins must be welded to the duct on the underside of horizontal assemblies and vertical assemblies spaced as illustrated in Figure 1B. Galvanized, mild steel speed washers must be placed over each impaling pin to secure the blanket. Steel banding straps must be placed circumferentially, $1^1/_2$ inches (38 mm) from the edge of the blanket and at $10^1/_2$ inches (267 mm) on center. Material must not be installed that has been abused or damaged, e.g., stepped on, unintentionally cut or ripped. The tension in the banding straps must be sufficient to firmly retain the blanket materials, but not to unduly compress the blanket, and must not be so great as to cause any cutting or damage or compression to the blanket material. Seven-inch-long (178 mm), No. 12 gage, copper-coated, mild steel impaling pins, welded to the duct as shown in Figure 1B, can be used as an alternative to steel banding straps on any size duct.

4.2.2 Grease Duct Access Doors:

4.2.2.1 General: Grease duct access doors must comply with Section 506.3. 8 of the IMC, and Section 510.3 of the UMC, as applicable.

4.2.2.2 Prefabricated Access Doors: The 3M Barrier Grease Duct Access Door Assembly is installed as illustrated in Figure 3. Three layers of the 615+ blanket must be installed over the access door such that each layer overlaps the preceding layer by 1 inch (25 mm) on all four sides. Edges of the outer layer of insulation blanket must be sealed with aluminum foil tape. A No. 16 gage steel plate the same size as the outer layer of insulation blanket must be secured over the outer layer of insulation.

4.2.2.3 Field-fabricated Access Doors: The access doors must be protected with three layers of 3M Fire Barrier Duct Wrap 615+ blanket material as illustrated in Figures 2 and 3. The first layer of blanket is cut the same size as the door, and the subsequent layers must overlap the previous layer by 1 inch (25.4 mm). Access door labels must be applied to all access doors.

4.2.3 Duct Support: Horizontal duct assemblies with maximum cross-sectional openings of 24 inches by 24 inches (610 mm by 610 mm) must be supported with minimum $^3/_8$-inch-diameter (9.5 mm), all-thread steel rod and 2-inch-by-2-inch-by-$^1/_8$-inch (51 mm by 51 mm by 3.2 mm) steel angle, spaced a maximum of 60 inches (1524 mm) on center. A minimum clearance of 0 inch and a maximum clearance of 6 inches (152 mm) is required between the vertical edge of the blanket material surrounding the duct and the steel rod.

Horizontal duct assemblies with maximum dimensions of 24 inches by 48 inches (610 mm by 1219 mm) must be supported with minimum $^1/_2$-inch-diameter (12.7 mm), all-thread steel rod and 2-inch-by-2-inch-by $^1/_4$-inch (51 mm by 51 mm by 6.4 mm) steel angle spaced a maximum of 60 inches (1524 mm) on center. A minimum clearance of 0 inch (0mm) and a maximum clearance of 6 inches (152mm) is required between the vertical edge of the blanket material surrounding the duct and the steel rod.

Vertical assemblies must be supported as shown in Figure 4. Vertical ducts must be supported at every floor line on the top of the slab.

4.2.4 Through-penetration Fire-stop Assemblies: See Table 1 and Figures 4 and 5 for descriptions of various through-penetration firestop assemblies that are used with the 3M Fire Barrier Duct Wrap 615+ system. The forming material placed in the annular space must be compressed to fill the space. The forming material must be recessed the appropriate depth (identified as Sealant Depth in Table 1) for application of the sealant. The sealant must be flush with the wall or floor surface. On floors, the sealant must be overlapped onto the floor approximately 1 inch (25.4 mm) and onto the insulated duct approximately $^1/_4$ inch (6.4 mm).

5.0 CONDITIONS OF USE

The 3M Fire Barrier Duct Wrap 615+ grease duct enclosure assembly described in this report complies with, or is a suitable alternative to what is specified in, those codes listed in Section 1.0 of this report, subject to the following conditions:

5.1 The enclosure systems must be constructed and installed in accordance with this report. In the event of a conflict between this report and the manufacturer's instructions, this report must govern.

5.2 The blanket materials are manufactured for 3M in Coahuila, Mexico, under a quality control program with inspections by Intertek Testing Services NA Inc. (AA-657).

6.0 EVIDENCE SUBMITTED

6.1 Data in accordance with ASTM E 2336 and the ICC-ES Acceptance Criteria for Grease Duct Enclosure Assemblies (AC101), dated April 2001 (editorially revised September 2004) [for 2003 code compliance].

6.2 A quality control manual.

7.0 IDENTIFICATION

The 3M Fire Barrier Duct Wrap 615+ blanket material must bear a label indicating the product name, the 3M Fire Protection Products name and address, the name of the inspection agency (Intertek Testing Services NA Inc.), and the evaluation report number (ICC-ES ESR-1255). The wording "Fire-resistive Enclosure, Do Not Remove" must be printed on the blankets at maximum 24-inch (610 mm) intervals.

The 3M Barrier Grease Duct Access doors are identified by a label bearing the 3M Company name and address, the product name, and the inspection agency name (Intertek Testing Services NA Inc.).

Sealants must be identified by the 3M company name and address, and the product name.

8.0 OTHER CODES:

In addition to the codes referenced in Section 1.0, the products described in this report were evaluated for compliance with the requirements of the following codes:

- 2006 *International Building Code*® (2006 IBC)
- 2006 *International Mechanical Code*® (2006 IMC)
- 2006 IAPMO *Uniform Mechanical Code* (2006 UMC)
- 2003 *International Building Code*® (2003 IBC)
- 2003 *International Mechanical Code*® (2003 IMC)
- 2003 IAPMO *Uniform Mechanical Code* (2003 UMC)

The products comply with the above-mentioned codes as described in Sections 2.0 through 7.0 of this report, except the applicable code sections are as follows for the report sections cited:

- Section 2.0:
  - — Grease duct enclosures:
    - o 2006 and 2003 IMC Section 506.3.10
  - — Shaft enclosures:
    - o 2006 and 2003 IBC Section 707.4
    - o 2006 and 2003 UMC Section 510.7.1
- Section 3.2:
  - — Joints and seams of grease ducts:
    - o 2006 and 2003 IMC Section 506.3.2
    - o 2006 and 2003 UMC Section 510.5.2
  - — Duct supports:
    - o 2006 and 2003 IMC Section 506.3.3
    - o 2006 and 2003 UMC Sections 510.1.7 and 510.5.1
- Section 4.1:
  - — 2006 and 2003 IMC Section 602.2.1
  - — 2006 and 2003 UMC Section 602.2
- Section 4.2.2.1:
  - — 2006 IMC Section 506.3.8
  - — 2003 IMC Sections 506.3.9 and 506.3.11
  - — 2006 and 2003 UMC Section 510.3

TABLE 1—THROUGH-PENETRATION FIRESTOP ASSEMBLIES[1]

MAXIMUM DUCT SIZE (inches by inches)	WALL, FLOOR OR CEILING CONSTRUCTION	ANNULAR SPACE (inches)		PENETRATION FIRESTOP		FIRE-RESISTANCE RATING (hours)	
		Min.	Max.	Forming Materials	Sealant Depth (inches)	F-Rating	T-Rating
24 × 30, wrapped with 3M Duct Wrap through-penetration	No. 25 gage steel studs with one layer of $^5/_8$-inch gypsum board on both sides	$^5/_8$	$3^1/_2$	Unfaced 3M Duct Wrap or min. 4 pcf mineral wool compressed 25 percent	$^5/_8$, both sides	1	NA
24 × 30, wrapped with 3M Duct Wrap through-penetration	No 25 gage steel studs with two layers of $^5/_8$-inch gypsum board on both sides	1	$3^1/_2$	Unfaced 3M Duct Wrap or min. 4 pcf mineral wool compressed to fill the annular space	$^5/_8$, both sides	2	NA
24 × 30, wrapped with 3M Duct Wrap through-penetration	2-by-10 wood joists, with $^5/_8$-inch gypsum board on the bottom side and $^3/_4$-inch plywood on the top side	1	$2^1/_2$	Unfaced 3M Duct Wrap or min. 4 pcf mineral wool compressed 25 percent	$^3/_4$, top surface	1	1
24 × 30, wrapped with 3M Duct Wrap through-penetration	$4^1/_2$-inch reinforced concrete slab	$1^1/_4$	$2^1/_2$	Unfaced 3M Duct Wrap or min. 4 pcf mineral wool compressed to fill the annular space	$^7/_{16}$, top surface	2	2
24 × 30, bare duct through-penetration	$4^1/_2$-inch reinforced concrete slab	1	2	Unfaced 3M Duct Wrap or min. 4 pcf mineral wool compressed 25 percent	$^3/_8$, top surface	2	2
24 × 48, wrapped with 3M Duct Wrap through-penetration	$4^1/_2$-inch reinforced concrete slab	1	$4^1/_2$	Unfaced 3M Duct Wrap or min. 4 pcf mineral wool compressed 56 percent	$^1/_4$, top surface	2	2

For **SI:** 1 inch = 25.4 mm.

[1]See Figure 4 and Figure 5 for an illustration of components.

FIGURE 1A
3M FIRE BARRIER DUCT WRAP 615+
COMMERCIAL KITCHEN GREASE DUCT SYSTEMS
1 OR 2 HOUR SHAFT ALTERNATIVE ZERO CLEARANCE TO COMBUSTIBLES
TELESCOPING TECHNIQUE W/BANDING ONLY
FOR DUCTS 24" (60.9 CM) OR LESS

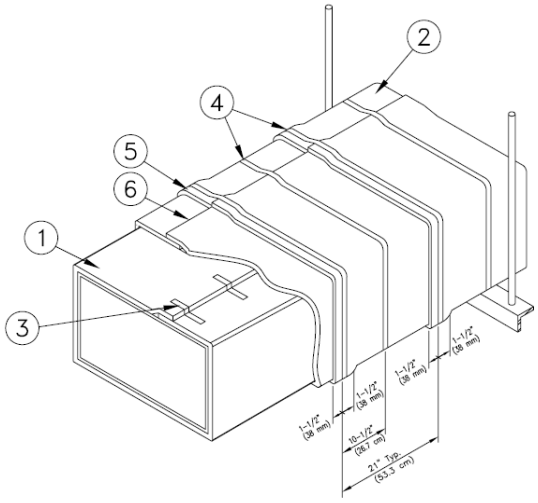

1.	First Layer 3M Fire Barrier Duct Wrap 615+
2.	Second Layer 3M Fire Barrier Duct Wrap 615+
3.	Filament Tape For Temporary Hold On 1st Layer Duct Wrap
4.	Steel Banding 1/2 in. (13 mm) Wide Min. Typical 10–1/2" O.C.
5.	3 in. (76 mm) Min. Longitudinal Overlap
6.	3 in. (76 mm) Min. Perimeter Overlap

System integrity is limited by quality of installation.

FIGURE 1B
3M FIRE BARRIER DUCT WRAP 615+
COMMERCIAL KITCHEN GREASE DUCT SYSTEMS
1 OR 2 HOUR SHAFT ALTERNATIVE ZERO CLEARANCE TO COMBUSTIBLES
TELESCOPING TECHNIQUE W/WELD PINS ONLY

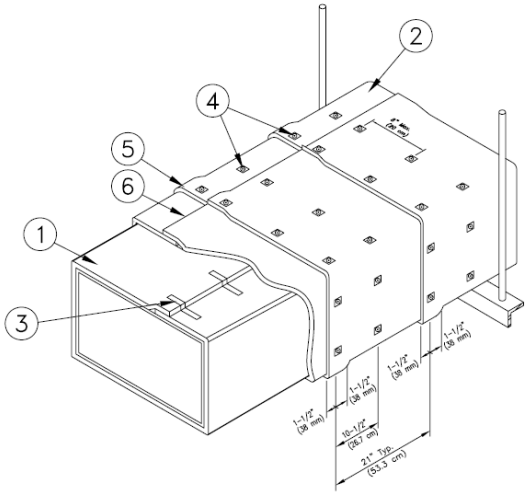

1.	First Layer 3M Fire Barrier Duct Wrap 615+
2.	Second Layer 3M Fire Barrier Duct Wrap 615+
3.	Filament Tape For Temporary Hold On 1st Layer Duct Wrap
4.	1–1/2" Square (38mm) or 1–1/2" dia (38mm) galvanized speed clips
5.	3 in. (76 mm) Min. Longitudinal Overlap
6.	3 in. (76 mm) Min. Perimeter Overlap

System integrity is limited by quality of installation.

FIGURE 1C TELESCOPING OVERLAP WRAP OPTION
CROSS SECTIONAL VIEW

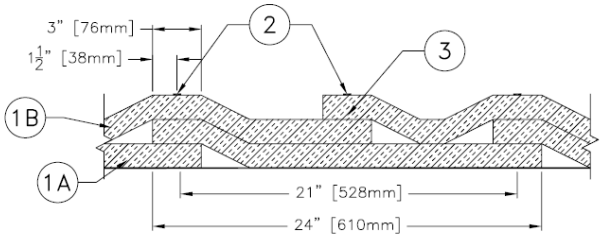

FIGURE 1D BUTT JOINT WITH COLLAR OPTION
CROSS SECTIONAL VIEW

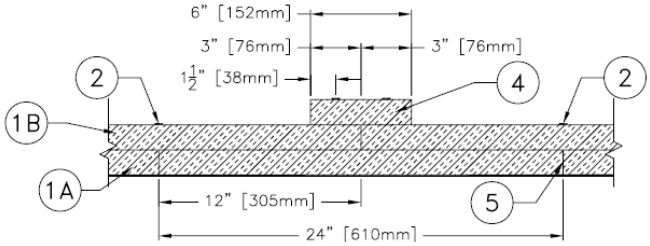

FIGURE 1E CHECKERBOARD OVERLAP OPTION
CROSS SECTIONAL VIEW

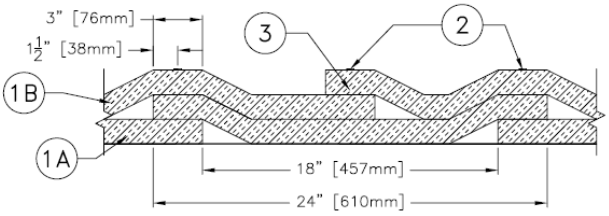

FIGURE 1F BUTT/OVERLAP OPTION
CROSS SECTIONAL VIEW

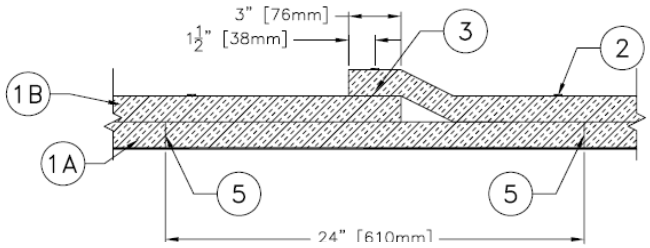

1A.	First Layer 3M Fire Barrier Duct Wrap 615+
1B.	Second Layer of 3M Fire Barrier Duct Wrap 615+
2.	Carbon or Stainless Steel Banding
3.	3 in. (76 mm) Min. Longitudinal Overlap
4.	6 in. (152 mm) Wide Collar Made from 3M Fire Barrier Duct Wrap 615+
5.	Firmly Butted Joint

System integrity is limited by quality of installation.

FIGURE 1—TYPICAL APPLICATION OF DUCT WRAP

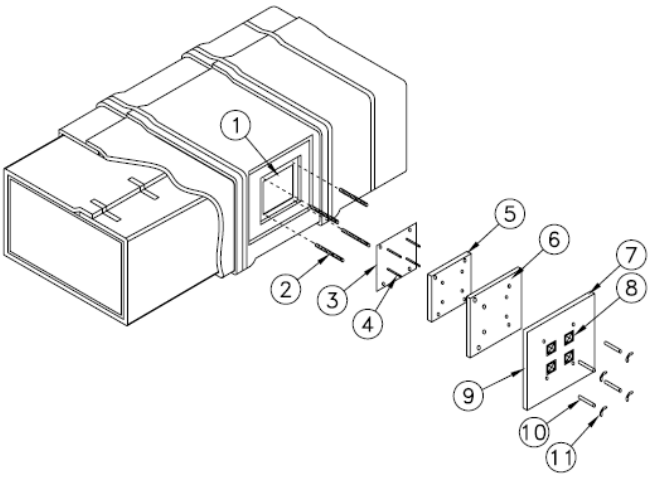

1.	Access Hole
2.	1/4 in. (6 mm) Dia. All Threaded Rods
3.	Access Cover – 16 Gauge
4.	Insulation Pins – Welded
5.	First Layer 3M Fire Barrier Duct Wrap 615+ Cut Same Size As Cover
6.	Second Layer 3M Fire Barrier Duct Wrap 615+ with 1 in. (25 mm) Overlap On All Sides
7.	Third Layer 3M Fire Barrier Duct Wrap 615+ with 1 in. (25 mm) Overlap On All Sides
8.	Speed Clips
9.	Aluminum Tape Covering All Exposed Edges
10.	Spool Pieces For Threaded Rods
11.	1/4 in. (6 mm) Diameter Wing Nuts

System integrity is limited by quality of installation.

FIGURE 2—3M FIRE BARRIER DUCT WRAP 615+ COMMERCIAL KITCHEN GREASE DUCT SYSTEMS, 1 - OR 2-HOUR, ACCESS DOOR SYSTEM

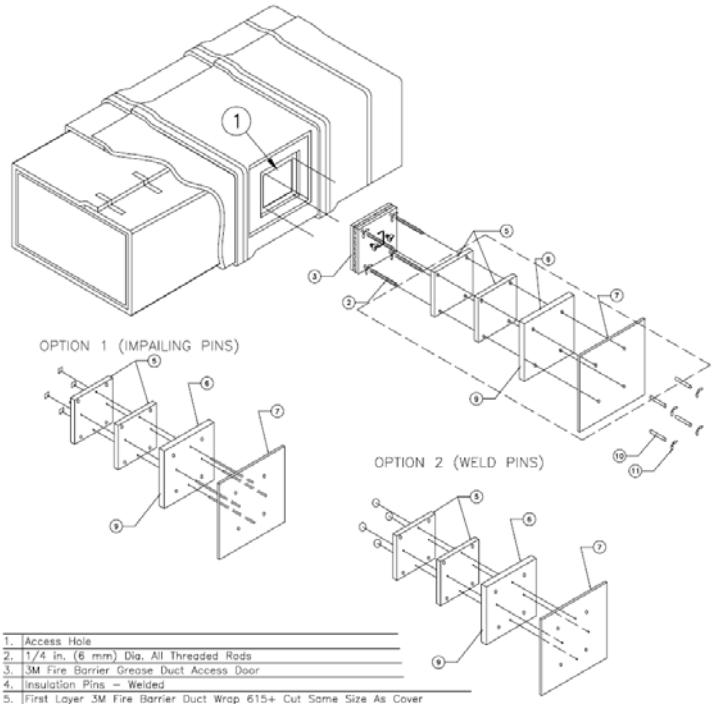

1.	Access Hole
2.	1/4 in. (6 mm) Dia. All Threaded Rods
3.	3M Fire Barrier Grease Duct Access Door
4.	Insulation Pins – Welded
5.	First Layer 3M Fire Barrier Duct Wrap 615+ Cut Same Size As Cover
6.	Second Layer 3M Fire Barrier Duct Wrap 615+ with 1 in. (25 mm) Overlap On All Sides
7.	Third Layer 3M Fire Barrier Duct Wrap 615+ with 1 in. (25 mm) Overlap On All Sides
8.	Speed Clips
9.	Aluminum Tape Covering All Exposed Edges
10.	Spool Pieces For Threaded Rods
11.	1/4 in. (6 mm) Diameter Wing Nuts

System integrity is limited by quality of installation.

FIGURE 3—3M FIRE BARRIER GREASE DUCT ACCESS DOOR

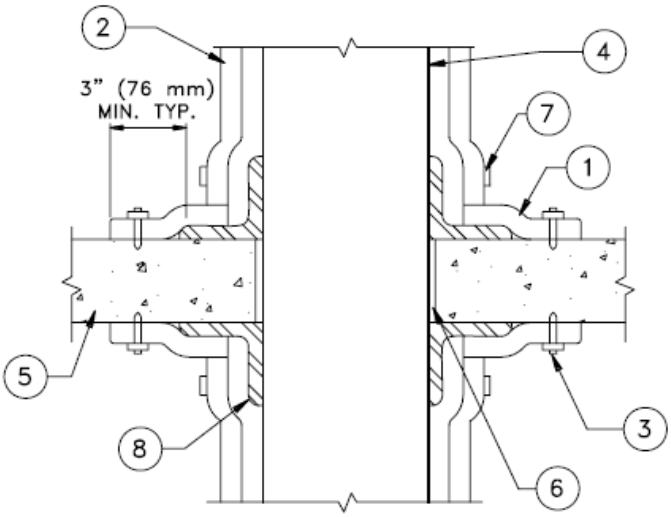

1.	First Layer 3M Fire Barrier Duct Wrap 615+
2.	Second Layer 3M Fire Barrier Duct Wrap 615+
3.	Mechanical Fasteners and Washers
4.	Duct
5.	Rated Floor/Ceiling
6.	Firestopping System
7.	Banding
8.	Support Channel

System integrity is limited by quality of installation.

FIGURE 4—3M FIRE BARRIER DUCT WRAP 615+ COMMERCIAL KITCHEN GREASE DUCT SYSTEMS, 1- OR 2-HOUR, VERTICAL SUPPORT

FIGURE 5A
3M FIRE BARRIER DUCT WRAP 615+
COMMERCIAL KITCHEN GREASE DUCT SYSTEMS
1 OR 2 HOUR THROUGH PENETRATION SYSTEMS
4-1/2 INCH (11,4cm) CONCRETE FLOOR OR WALL

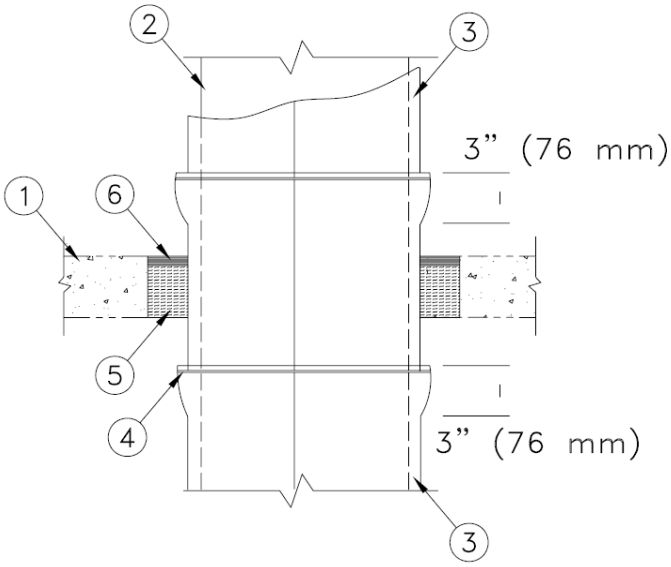

1.	Floor/Ceiling or Wall Assembly
2.	Duct
3.	2 Layers 3M Fire Barrier Duct Wrap 615+
4.	Banding or Pinning
5.	Packing Material
6.	3M Fire Barrier 1000 NS or 1003 SL Silicone Sealant (Note: 1003 SL for floors only) For Wall Assembly Apply Sealant To Both Sides of Wall.

System integrity is limited by quality of installation.

FIGURE 5B
3M FIRE BARRIER DUCT WRAP 615+
COMMERCIAL KITCHEN GREASE DUCT SYSTEMS
1 OR 2 HOUR THROUGH PENETRATION SYSTEMS
FIRE-RATED GYPSUM WALLBOARD

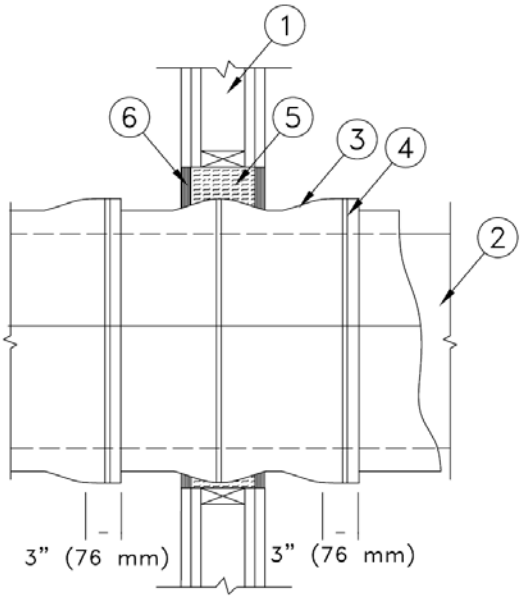

1.	Gypsum Wallboard Assembly (1 layer for 1 hour, 2 layers for 2 hours)
2.	Duct
3.	2 Layers 3M Fire Barrier Duct Wrap 615+
4.	Banding or Pinning
5.	Packing Material
6.	3M Fire Barrier 1000 NS or 1003 SL Silicone Sealant

System integrity is limited by quality of installation.

FIGURE 5C
3M FIRE BARRIER DUCT WRAP 615+
COMMERCIAL KITCHEN GREASE DUCT SYSTEMS
1 OR 2 HOUR THROUGH PENETRATION SYSTEMS
4-1/2 INCH (11,4cm) CONCRETE FLOOR OR WALL

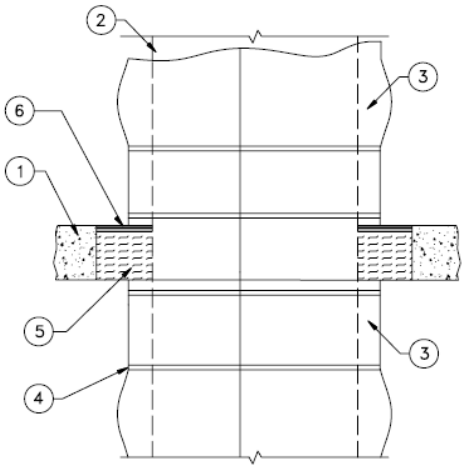

1.	Floor/Ceiling or Wall Assembly
2.	Duct
3.	2 Layers 3M Fire Barrier Duct Wrap 615+
4.	Banding or Pinning
5.	Packing Material
6.	3M Fire Barrier 1000 NS or 1003 SL Silicone Sealant (Note: 1003 SL for floors only) For Wall Assembly Apply Sealant To Both Sides of Wall.

System integrity is limited by quality of installation.

FIGURE 5D
3M FIRE BARRIER DUCT WRAP 615+
COMMERCIAL KITCHEN GREASE DUCT SYSTEMS
1 HOUR THROUGH PENETRATION SYSTEMS
FIRE RATED WOOD/GYPSUM - FLOOR/CEILING ASSEMBLY

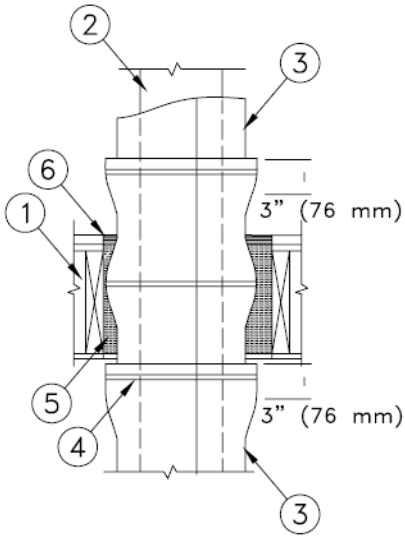

1.	Fire Rated Floor/Ceiling Assembly
2.	Duct
3.	2 Layers 3M Fire Barrier Duct Wrap 615+
4.	Banding or Pinning
5.	Packing Material
6.	3M Fire Barrier 1000 NS or 1003 SL Silicone Sealant

System integrity is limited by quality of installation.

FIGURE 5—THROUGH-PENETRATION FIRE-STOPS