Science.
Applied to Life.™

Instructions

3M-Matic™ AccuGlide™ V HSP 3 Inch Taping Heads

Type 22300

Serial #: _____

For reference, record machine serial number here.

Important Safety Information

BEFORE INSTALLING OR OPERATING THIS EQUIPMENT
Read, understand and follow all safety and operating instructions.

Spare Parts

It is recommended you immediately order the spare parts listed in the "Spare Parts/Service Information" section. These parts are expected to wear through normal use, and should be kept on hand to minimize production delays.

Replacement parts and service information

To Our Customers:

This is the 3M-Matic™/AccuGlide™/Scotch® equipment you ordered.
It has been set up and tested in the factory with Scotch® Tapes.

Included with each machine is an Instructions and Parts List manual.

Technical Assistance / Replacement Parts and Additional Manuals:

For technical assistance, contact our help line at 1-800-328-1390.
Provide the customer support coordinator with the model/machine name, machine type, and serial number that are located on the identification plate
(For example: Model - AccuGlide V HSP 3 Inch - Type 22300

To order replacement parts, contact us:

CSPD
6299 Dressler Road NW
Canton, OH 44720
store.combi.com/CSPD/PublicStore/

Phone: 1-800-344-9883
Fax: 1-877-847-5883
e-mail: CSPD-CSR@combi.com
www.combi.com

Identification Plate

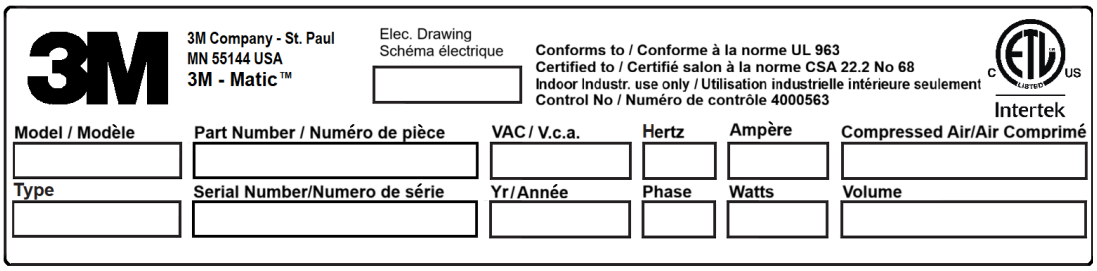

Minimum billing on parts orders will be $50.00.
Replacement part prices available on request.
There will be a 15% restocking fee per invoice on returned parts.

Note: For replacement part information and ordering outside the U.S. contact the local 3M representative or subsidiary.

To Our Customers:

This is the 3M-Matic™/AccuGlide™/Scotch® equipment you ordered.
It has been set up and tested in the factory with Scotch® tapes.

Included with each machine is an Instructions and Parts List Manual.

Service, replacement parts, and additional manuals available direct from:

Order parts by part number, part description, and quantity required.
Also, when ordering parts or additional manuals, include model/machine name, machine type, and serial number that are located on the identification plate.

Table of Contents: AccuGlide™ V HSP - 3 Inch - Type 22300

AccuGlide™ V HSP Taping Head Manual - 3 Inch - Type 22300 **Page**

Cover Page

Replacement Parts and Service Information . . . . . iii– v
Table of Contents vii
Equipment Warranty and Limited Remedy. viii

Intended Use 1
Taping Head Contents / How to Use Manual. 3
Important Safeguards. 4-5

Specifications 6-7
Dimensional Drawing. 7

Installation 8
Receiving and Handling 8
Installation Guidelines 8
Tape Leg Length. 8
Tape Width Adjustment 8

Operation 9-11
Tape Loading – Lower Taping Head 10-11
Maintenance 12-13
Blade Replacement 12
Blade Guard 12
Blade Oiler Pad 12
Cleaning 13
Applying/Buffing Roller Replacement 13

Adjustments. 14-15
Tape Latch Alignment 14
Tape Drum Friction Brake 14
Applying Mechanism Spring 15
One-Way Tension Roller 15
Tape Leg Length. 16
Troubleshooting Guide. 17-18
Spare Parts/Service Information 19
Recommended Spare Parts 19
Replacement Parts and Service. . . . . .-21

Replacement Parts Illustrations and Parts List . . . . . 23-End of Manual

Warranty

Equipment Warranty and Limited Remedy: THE FOLLOWING WARRANTY IS MADE IN LIEU OF ALL OTHER WARRANTIES, EXPRESS OR IMPLIED, INCLUDING, BUT NOT LIMITED TO, THE IMPLIED WARRANTY OF MERCHANTABILITY, THE IMPLIED WARRANTY OF FITNESS FOR A PARTICULAR PURPOSE AND ANY IMPLIED WARRANTY ARISING OUT OF A COURSE OF DEALING, A CUSTOM OR USAGE OF TRADE:

3M sells its 3M-Matic™ AccuGlide™ V HSP Taping Head, Type 22300 with the following warranties:

1. The Taping Head blade, springs and rollers will be free from defects in material and manufacture for ninety (90) days after delivery.
2. All other Taping Head parts will be free from defects in material and manufacture for three (3) years after delivery.

If any part is defective within this warranty period, your exclusive remedy and 3M's and seller's sole obligation shall be, at 3M's option, to repair or replace the part. 3M must receive actual notice of any alleged defect within a reasonable time after it is discovered, but in no event shall 3M have any obligation under this warranty unless it receives such notice within five (5) business days after the expiration of the warranty period. All notices required hereunder shall be given to 3M solely through the 3M-Matic™ Help line. To be entitled to repair or replacement as provided under this warranty, the part must be returned as directed by 3M to its factory or other authorized service station designated by 3M. If 3M is unable to repair or replace the part within a reasonable time after receipt thereof, 3M, at its option, will replace the equipment or refund the purchase price. 3M shall have no obligation to provide or pay for the labor required to remove any part or equipment or to install the repaired or replacement part or equipment. 3M shall have no obligation to repair or replace those parts failing due to normal wear, inadequate or improper maintenance, inadequate cleaning, non-lubrication, improper operating environment, improper utilities, operator error or misuse, alteration or modification, mishandling, lack of reasonable care, or due to any accidental cause.

Limitation of Liability: Except where prohibited by law, 3M and seller will not be liable for any loss or damage arising from this 3M equipment, whether direct, indirect, special, incidental, or consequential, regardless of the legal theory asserted, including breach of warranty, breach of contract, negligence, or strict liability.

Note: The foregoing Equipment Warranty and Limited Remedy and Limitation of Liability may be changed only by a written agreement signed by authorized representatives of 3M and seller.

AccuGlide™, Scotch™, and 3M-Matic™ are Trademarks of 3M, St. Paul, Minnesota 55144-1000

Intended Use

The intended use of the AccuGlide™ V HSP 3 Inch - Type 22300 Upper and Lower Taping Heads is to apply a "C" clip of Scotch® pressure-sensitive film box sealing tape to the top and/or bottom center seam of regular slotted containers. The compact size and simplicity of the taping head makes it suitable for mounting in box conveying systems other than 3M-Matic™ case sealers. This includes replacement of other types of taping, gluing or stapling heads in existing case sealing machines.

The AccuGlide™ V HSP 3 Inch - Type 22300 Upper and Lower Taping Heads have been designed and tested for use with Scotch® pressure-sensitive film box sealing tape.

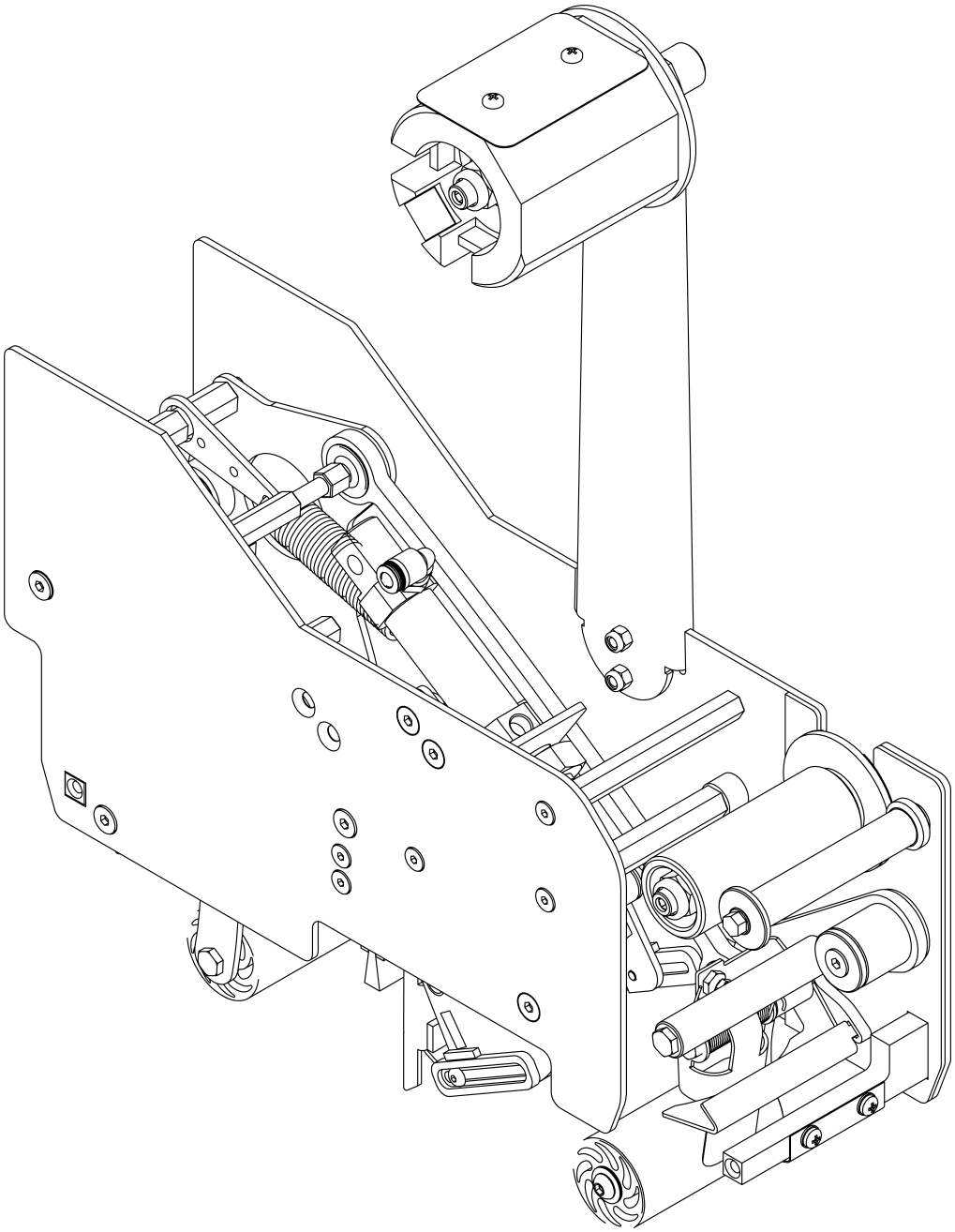

AccuGlide™ V HSP Taping Head - 3 Inch, Type 22300

Taping Head Contents

AccuGlide™ V HSP - 3 Inch - Type 22300 Upper and Lower Taping Heads consist of:

Qty.	Part Name
1	Taping Head Assembly
1	Tape Drum and Bracket Assembly
1	Hardware and Spare Parts Kit

General Information

This instruction manual covers safety aspects, handling and transport, storage, unpacking, preparation, installation, operation, set-up and adjustments, technical and manufacturing specifications, maintenance, troubleshooting, repair work and servicing, electric diagrams, warranty information, disposal (ELV), a glossary with a definition of symbols, plus a parts list of the 3M-Matic™ Accugllide V HSP (3 Inch - Type 22300)

3M Industrial Specialties Division
3M Center, St. Paul, MN 55144-1000 (USA)

Edition June 2026/Copyright 3M 2026. All rights reserved The manufacturer reserves the right to change the product at any time without notice. Publication © 3M 2026.
44-0009-2158-3

How to use this Manual

The manual is an important part of the machine; all information contained herein is intended to enable the equipment to be maintained in perfect condition and operated safely. Ensure that the manual is available to all operators of this equipment and the manual is kept up to date with all subsequent amendments. Should the equipment be sold or disposed of, please ensure that the manual is passed on with the machine. Electrical and pneumatic diagrams are included in the manual. Equipment using PLC controls and/or electronic components will include relevant schematics or programs in the enclosure (or will be delivered separately as needed)

Keep the manual in a clean and dry place near the machine. Do not remove, tear or rewrite parts of the manual for any reason. Use the manual without damaging it. However, if the manual has been lost or damaged, ask your after sale service for a new copy (if it is possible, please have the manual name, part number, and revision information and/or model/machine name, machine type, and serial number) that are located on the identification plate (For example: V HSP 3” - Type 22300).

Note: All the important Warning notes related to the operation of the machine are identified by the symbol:

Updating the Manual

Modifications to the machine are subject to manufacturer’s internal procedures. The user may receive pages or parts of the manual which contain amendment made after its first publication. The user must use them to update this manual.

Important Safeguards

Explanation of Signal Word and Possible Consequences

This safety alert symbol identifies important messages in this manual. READ AND UNDERSTAND THEM BEFORE INSTALLING OR OPERATING THIS EQUIPMENT.

Caution — Indicates a potentially hazardous situation, which, if not avoided, may result in minor or moderate injury and/or property damage.

Warning — Indicates a potentially hazardous situation, which, if not avoided, could result in death or serious injury and/or property damage.

Warning

- **To reduce the risk associated with mechanical hazards**
  - Read, understand and follow all safety and operating instructions before operating or servicing the case sealer
  - Allow only properly trained and qualified personnel to operate and or service this equipment

Warning

- **To reduce the risk associated with shear, pinch, and entanglement hazards**
  - Turn air and electrical supplies off on associated equipment before performing any adjustments, maintenance, or servicing the taping heads
  - Never attempt to work on the taping head or load tape while the box drive system is running

Caution

- **To reduce the risk associated with muscle strain:**
  - Use proper body mechanics when removing or installing taping heads that are moderately heavy or may be considered awkward to lift
- **To reduce the risk associated with impact hazards**
  - Place the taping head on a smooth level surface when maintaining or servicing this equipment
- **To reduce the risk associated with pinch hazards:**
  - Keep hands, hair, loose clothing, and jewelry away from the taping heads

Warning

- **To reduce the risk associated with sharp blade hazards:**
  - Keep hands and fingers away from tape cutoff blades under orange blade guards. The blades are extremely sharp.

(Important Safeguards *continued* on next page)

Important **-** In the event the following safety labels are damaged or destroyed, they must be replaced to ensure operator safety. See "Replacement Parts Illustrations and Parts Lists" for label part numbers.

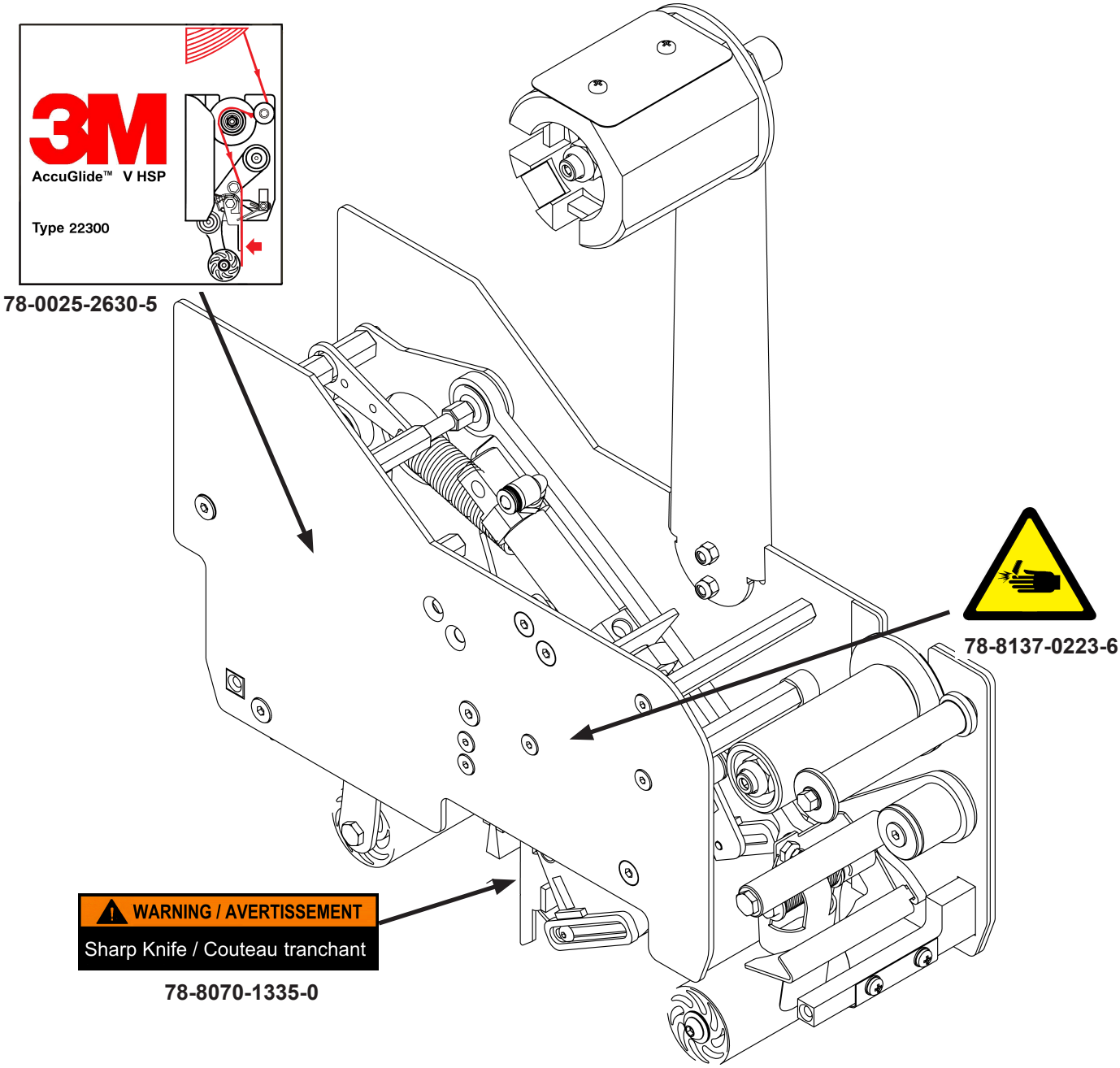

Figure 1-1 Replacement Labels/3M Part Numbers

Specifications

1. **Tape:**

   For use with Scotch® pressure-sensitive film box sealing tapes.

2. **Tape Width:**

   50.8mm [2.0 inches] minimum to 76.2 mm [3.0 inches] maximum.

3. **Tape Roll Diameter:**

   Up to 405mm [16 inches] maximum on a 76.2mm [3 inch] diameter core.
   (Accommodates all system roll lengths of Scotch® film tapes.)

4. **Tape Application Leg Length - Standard:**

   50.8 mm ± 6 mm [2 inches ± 0.25 inch]

5. **Box Size Capacities:**

   For use with center seam regular slotted containers.

   Length * – 152 mm [6 inches]

   Height * – 102 mm [4 inches]

   Width * – 152 mm [6 inches]

   Note: Box size capacities may also be determined by the case conveying system used.

6. **Operating Conditions:**

   Use in dry, relatively clean environments at 5° to 40°C [40° to 105°F] with clean dry boxes.

   Important – Taping heads should not be washed down or subjected to conditions causing moisture condensation on components.

7. **Taping Head Dimensions:**

   Length – 400 mm [15.75 inches]
   Height – 586.5 mm [23.1 inches] (with tape)
   Width – 103.5 mm [4.07 inches] (without mounting spacers)
   Weight – Packaged: 5.9 kg [13 lbs.] Unpackaged: 4.8 kg [10.5 lbs.]

(Specifications *continued* on next page)

Specifications *(continued)*

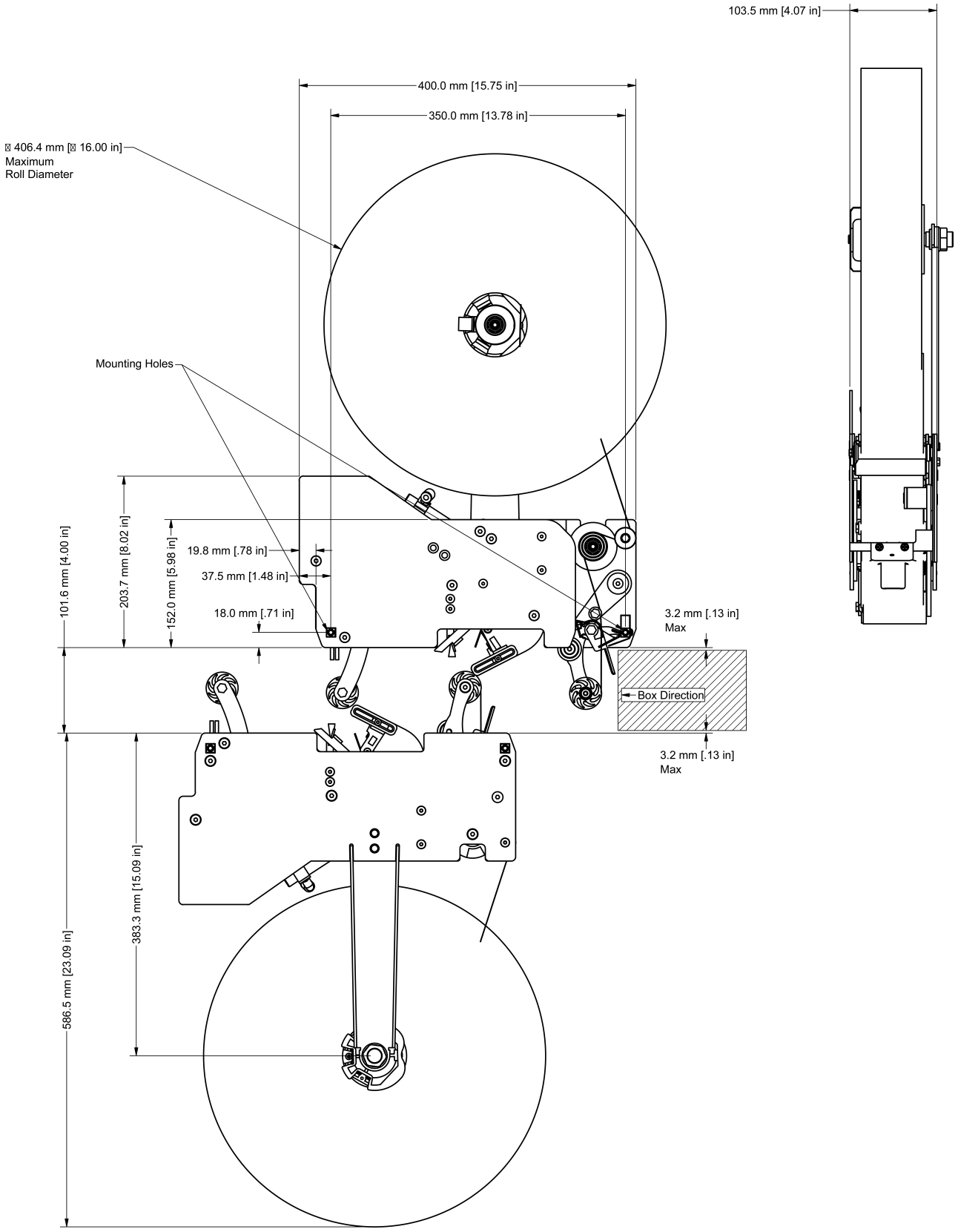

Installation

Warning

- **To reduce the risk associated with sharp blade hazards:**

- Keep hands and fingers away from tape cutoff blades under orange blade guards. The blades are extremely sharp.

Receiving And Handling

After the taping head assembly has been unpackaged, examine the unit for damage that might have occurred during transit. If damage is evident, file a damage claim immediately with the transportation company and also notify your 3M Representative.

Installation Guidelines

The taping head assembly can be used in converting existing or in custom made machinery.
It can be mounted for top taping or bottom taping. Refer to "Box Size Capacities," as well as Figure 2-1 in the Specifications section, for following points making installations:

Important – Always conduct a hazard review to determine appropriate guarding requirements when the installation is in an application other than 3M-Matic™ equipment

1. The box conveying system must positively propel the box in a continuous motion (see specifications) past the taping head assembly since the box motion actuates the taping mechanism.

Caution

- **To reduce the risk associated with muscle strain:**
- Use proper body mechanics when removing or installing taping heads that are moderately heavy or may be considered awkward to lift

2. If a pusher/cleated conveyor is used, steps should be taken in conveyor to prevent pusher from contacting applying or buffing roller arms (resulting in damage to taping head).
3. Figure 2-1 illustrates the typical mounting relationship for opposing taping head assemblies to allow taping of box heights (see specifications). The taping heads must be completely staggered so only one tape seal is being applied at one time.
4. Mounting studs are provided with the taping head, but special installations may require alternate mounting means.
5. Box hold-down/guide skis should be provided and taping head mounted so that side plates are 6mm [0.25 inch] maximum away from the ski surface on which the box rides.

Tape Leg Length

Taping heads are factory set to apply 58mm [2.25 inches] tape legs.

Tape Width Adjustment

Taping heads are factory set to apply 72mm [2.83 inch] wide tape. If it is necessary to align the tape or to apply narrower tapes, refer to "Adjustments – Tape Web Alignment" set-up procedure.

Figure 3-1 Taping Head Components/ Threading Diagram - Upper Head (Left Side View)

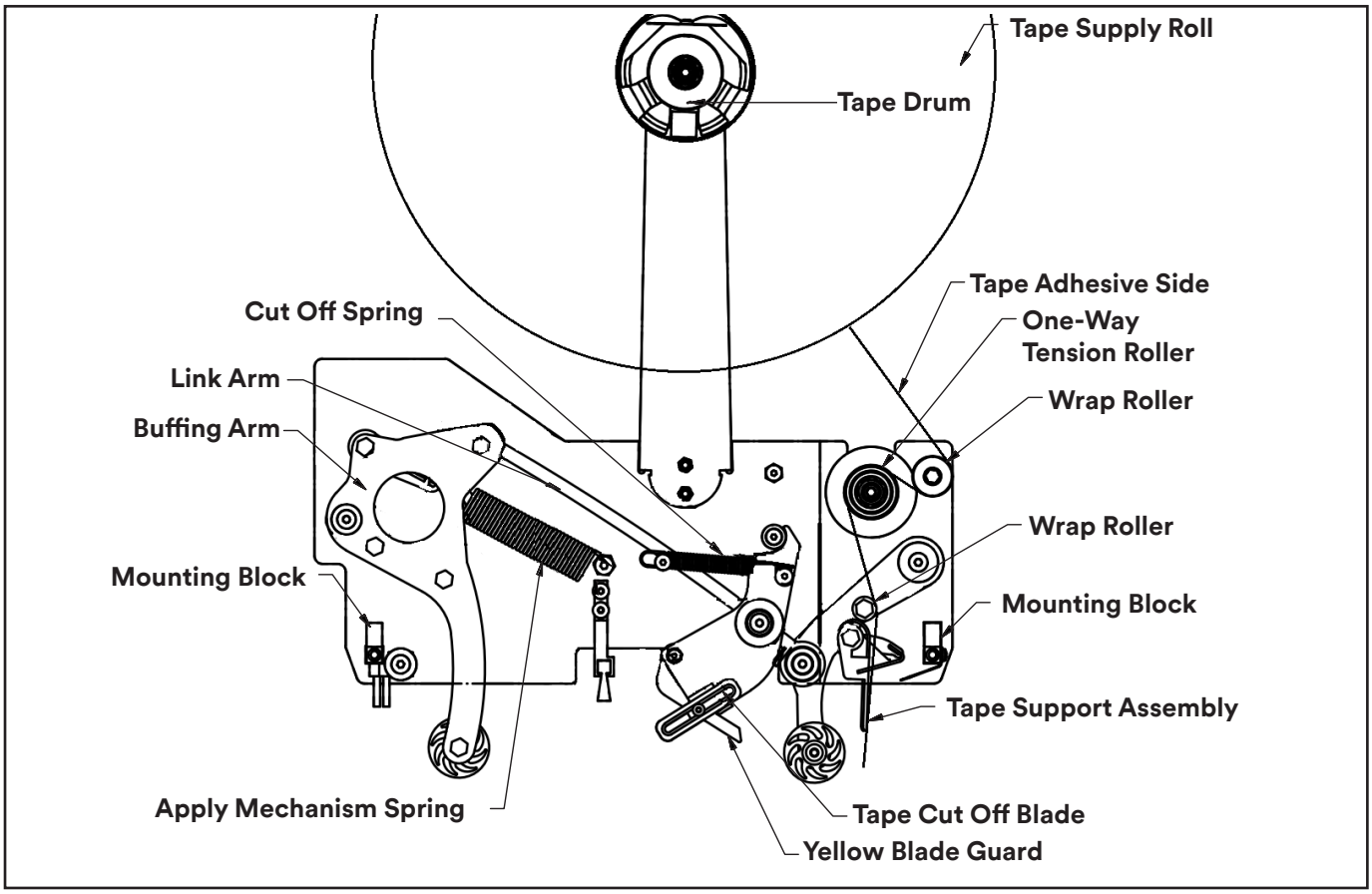

Warning

- **To reduce the risk associated with sharp blade hazards:**
- Keep hands and fingers away from tape cutoff blades under orange blade guards. The blades are extremely sharp.

It is recommended that the detailed instructions and sketches in this manual be referred to the first few times the taping head is loaded/threaded until the operator becomes thoroughly familiar with the tape loading operation.

Note – Remove tape roll before removing taping head from machine to minimize weight.

Tape Loading – Taping Head

1. Place the Taping Head in a convenient working position.
2. Use Figures 3-3/3-5 and tape threading label. Position tape roll so adhesive side of tape faces front of taping head as it's pulled from supply roll.
3. Guide the tape around the tension wrap roller (Position 1) then back around the one-way tension roller (Position 2).
4. Continue pulling the tape down and past the wrap roller (Position 3) and through the Tape Support Assembly.
5. Pull the tape down past the applying roller (Position 4). When properly threaded the adhesive side of the tape should be facing the tension roller at position 2 and away from the guide roller at position 3.
6. Cut away any excess tape.

Important – Do not cut against apply roller - roller damage could occur.

Tape Loading – Lower Taping Head

1. Remove the lower taping head from the conveyor bed or associated equipment and place it a convenient working position.
2. Lower taping head is loaded and threaded in same manner as upper head.

Warning

- **To reduce the risk associated with shear, pinch, and entanglement hazards**
- Turn air and electrical supplies off on associated equipment before performing any adjustments, maintenance, or servicing the taping heads
- Never attempt to work on the taping head or load tape while the box drive system is running

Caution

- **To reduce the risk associated with muscle strain:**
- Use proper body mechanics when removing or installing taping heads that are moderately heavy or may be considered awkward to lift
- **To reduce the risk associated with impact hazards**
- Place the taping head on a smooth level surface when maintaining or servicing this equipment

Figure 3-3

Insert threading needle through rollers in direction indicated by arrows.

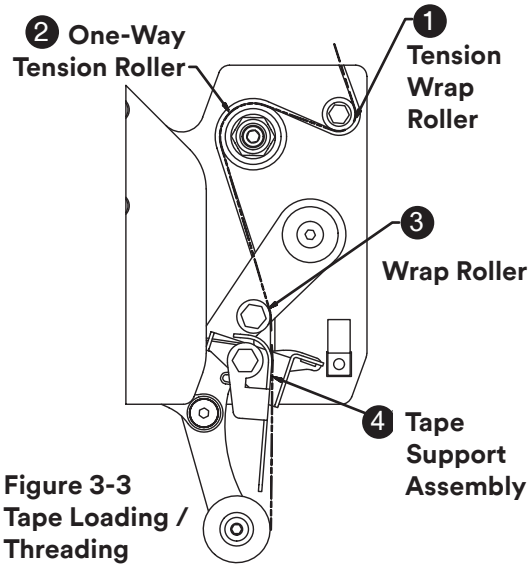

Figure 3-3 Tape Loading / Threading

Figure 3-4

Place tape roll on tape drum to dispense tape with adhesive side forward. Seat tape roll fully against back flange of drum. Adhere tape lead end to threading needle as shown.

Manually turn tape roll to create slack tape while pulling threading needle through tape applying mechanism until needle is through and tape is in alignment with applying roller.

Excess tape can be cut with a scissors at applying roller.

Warning

- **To reduce the risk associated with sharp blade hazards:**
- Keep hands and fingers away from tape cutoff blades under orange blade guards. The blades are extremely sharp.

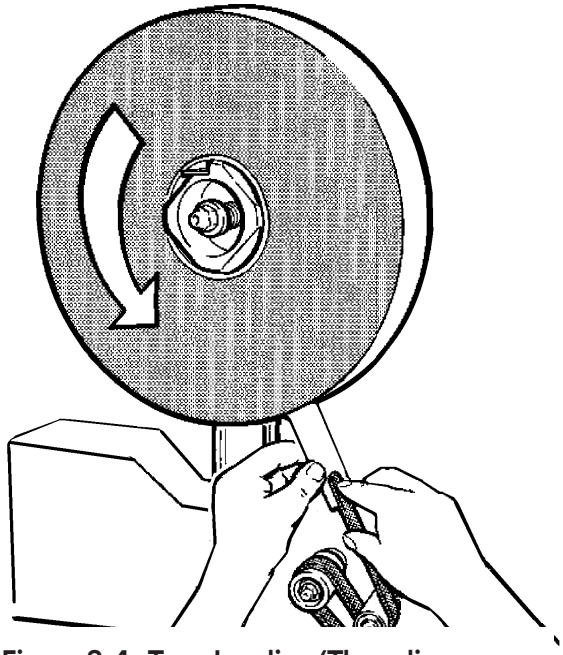

Figure 3-4 Tape Loading/Threading

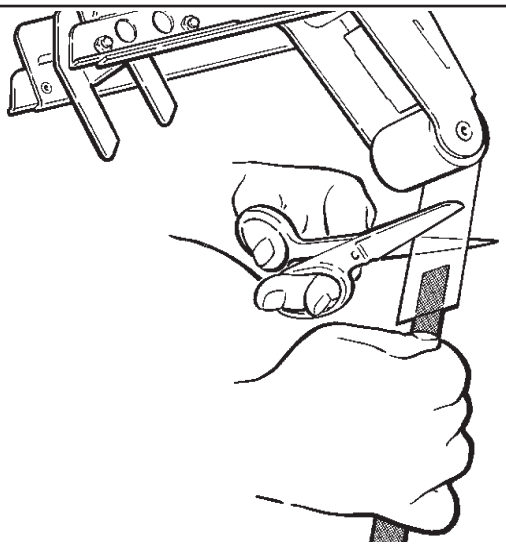

Figure 3-5 Tape Loading/Threading

Maintenance

The AccuGlide™ V HSP 3 Inch Taping Head has been designed for long, trouble free service. The taping head will perform best when it receives routine maintenance and cleaning. Taping head components that fail or wear excessively should be promptly repaired or replaced to prevent damage to other portions of the head or to the product.

Blade Replacement, Upper and Lower Taping Heads – Figure 4-1

1. Loosen, but do not remove, the blade screws (A). Remove and discard old blade.
2. Mount the new blade (B) with the beveled side away from the blade holder.
3. Bottom the blade slots against the screws (this will position the blade at the correct angle.) Tighten the blade screws to secure the blade.

Note – Check the blade position to insure proper clearance between blade and guard by slowly pivoting blade guard back.

Blade Guard

The blade guard covers the blade whenever a box is not being taped. Periodically check to be sure the blade guard is functioning properly and returning to cover the blade. Replace any defective parts.

Blade Oiler Pad

To reduce adhesive build-up, the taping heads are equipped with a factory pre-lubricated felt oiler pad that provides a film of oil on the cutting edge of the blade. Blade maintainance should include keeping the felt oiler pad saturated with Silicone.

Should tape adhesive build-up occur on blade, carefully wipe clean with an oily cloth.

Warning

- **To reduce the risk associated with shear, pinch, and entanglement hazards**
- Turn air and electrical supplies off on associated equipment before performing any adjustments, maintenance, or servicing the taping heads
- Never attempt to work on the taping head or load tape while the box drive system is running

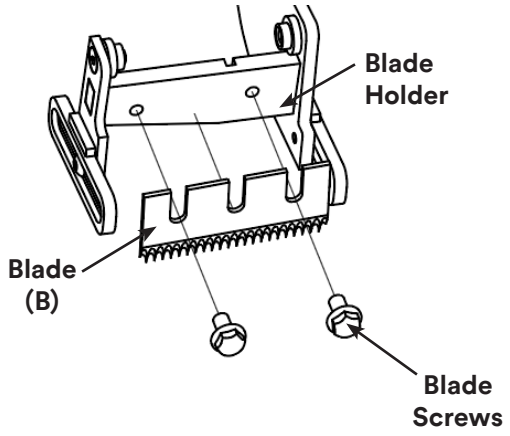

Figure 4-1 Blade Replacement

Warning

- **To reduce the risk associated with sharp blade hazards:**
- Keep hands and fingers away from tape cutoff blades under orange blade guards. The blades are extremely sharp.

(Maintenance *continued* on next page.)

Cleaning

Regular slotted containers produce a great deal of dust and paper chips when conveyed through taping heads. If this dust is allowed to build-up on the heads, it can cause wear on the moving parts. Excessive dirt build-up should be wiped off with a damp cloth. Cleaning should be done once per month, depending on the number and type of boxes used. If the boxes used are dirty, or if the environment in which the heads operate is dusty, cleaning on a more frequent basis may be necessary.

Note – Never attempt to remove dirt from taping heads by blowing it out with compressed air. This can cause the dirt to be blown inside components onto sliding surfaces. Dirt in these areas can cause serious equipment damage. Never wash down or subject taping heads to conditions causing moisture condensation on components. Serious equipment damage could result.

Applying / Buffing Roller Replacement

Replacing roller requires removal of the mounting screw (Figure 4-2 - also see Parts List).

⚠ Warning

- **To reduce the risk associated with sharp blade hazards:**
  - Keep hands and fingers away from tape cutoff blades under orange blade guards. The blades are extremely sharp.

⚠ Warning

- **To reduce the risk associated with shear, pinch, and entanglement hazards**
  - Turn air and electrical supplies off on associated equipment before performing any adjustments, maintenance, or servicing the taping heads
  - Never attempt to work on the taping head or load tape while the box drive system is running

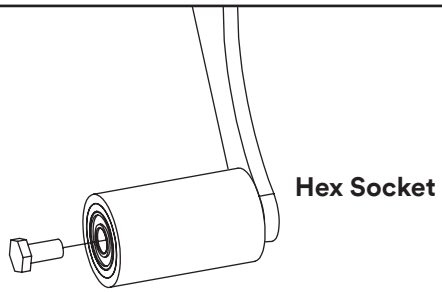

Figure 4-2 Applying Roller

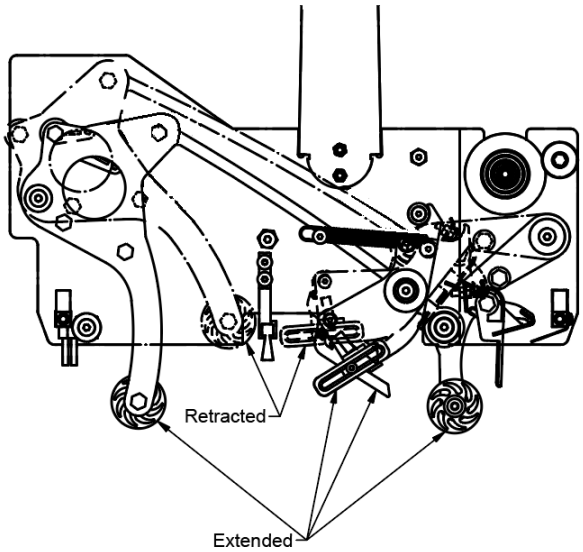

Figure 4-3 Applying / Buffing Roller Positions

Adjustments

Tape Latch Alignment – Figure 5-1

The Latching tape drum assembly is pre-set to accommodate 48mm [2 inch] wide tape. Tape drum assembly is adjustable to provide alignment of narrower tapes.

To move the latch to a position that corresponds to a new tape core width (Figure 5-1):

1. Remove screw from the latch.
2. Move latch to position that corresponds to the tape core width.
3. Replace screw in new latch location.

To adjust or center tape width on centerline of taping head (and box center seam - Figure 5-2):

1. Loosen locking hex nut behind tape drum bracket on tape drum shaft. Use an adjustable wrench or 25mm open end wrench.
2. Using 5mm Hex Wrench, turn tape drum shaft in/out to center tape web.
3. Tighten locking hex nut to secure the adjustment.

No other components require adjustment for tape web alignment.

Tape Drum Friction Brake – Figure 5-3

The tape drum friction brake on taping head is pre-set for normal operation to prevent tape roll over travel. Should tension adjustment be required, turn self-locking nut on shaft to vary spring compression. Turn nut clockwise to increase braking force, and counterclockwise to decrease braking force. Adjust brake to minimum tension to prevent tape roll over travel.

Warning

- **To reduce the risk associated with shear, pinch, and entanglement hazards**
- Turn air and electrical supplies off on associated equipment before performing any adjustments, maintenance, or servicing the taping heads
- Never attempt to work on the taping head or load tape while the box drive system is running

Note – Excess braking force will cause poor tape application and may lead to tape tabbing on trailing tape leg.

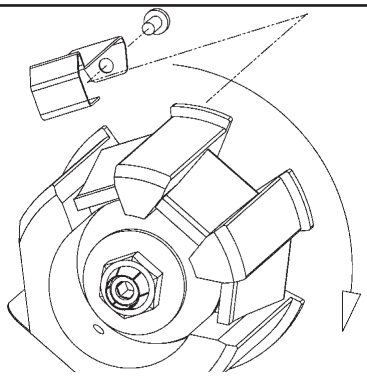

Figure 5-1 Tape Latch Alignment

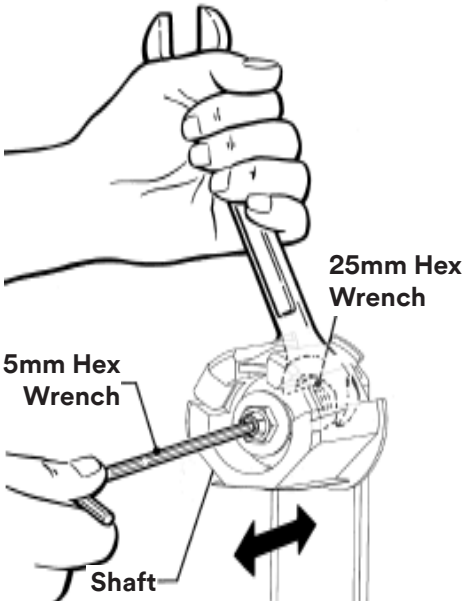

Figure 5-2 Tape Web Alignment

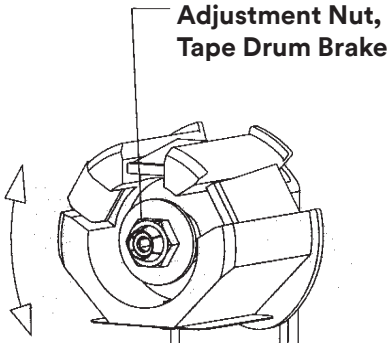

Figure 5-3 Tape Drum Friction Brake

(adjustments *continued* on next page.)

Applying Mechanism Spring

The applying mechanism spring, shown in Figures 5-4, controls applying and buffing roller pressure on the box and returns the mechanism to the reset position. The spring pressure is pre-set for normal operation.

One-Way Tension Roller
Figure 5-5

The one-way tension roller is factory set. When replacing this assembly, the roller must have 0,5 kg [1 lb.] min. tangential force when turning.

To Adjust Tension:

1. Wrap a cord or small strap (non-adhesive) 4-6 turns around the tension roller.
2. Attach a spring scale to the end of the cord or strap.
3. Turn adjusting nut (with socket wrench provided) until required force of approximately 0.5 kg to 0.9 kg [1 to 2 lbs.] is reached to turn roller pulling on spring scale.

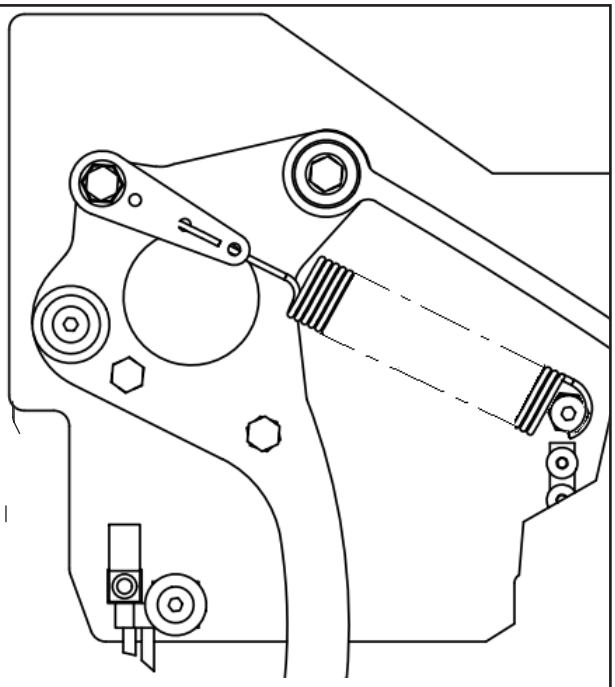

Figure 5-4 Applying Mechanism Spring

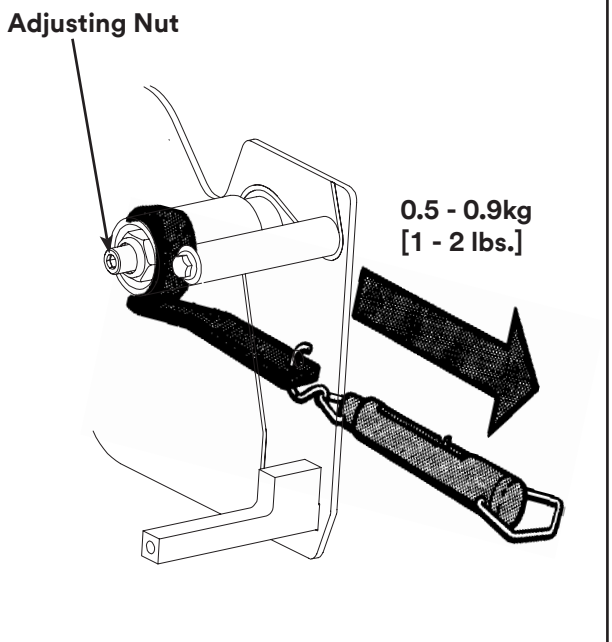

Figure 5-5 One-Way Tension Roller

Warning

- **To reduce the risk associated with shear, pinch, and entanglement hazards**
- Turn air and electrical supplies off on associated equipment before performing any adjustments, maintenance, or servicing the taping heads
- Never attempt to work on the taping head or load tape while the box drive system is running

(Adjustments *continued* on next page.)

Notes:

Toubleshooting

Troubleshooting Guide

Problem	Cause	Correction
The tape leg on the front of the case is too long	The tape is threaded incorrectly	The tape must go around the wrap roller before going around the one-way tension roller
	The tape tension is too low	Adjust the one-way tension roller
	Tape tracks to one side or drags on the support tabs of applying frame	Adjust the tape web alignments
	The one-way tension roller is not correctly positioned	Position the roller in its mounting slot so that the tape extends just beyond the centerline of the applying roller
	Taping head is not set up properly	Check leg length adjustments
	The blade is dull and/or has broken teeth	Replace the blade
The blade does not cut tape or tape end is jagged/shredded	Tape tension is insufficient	Increase tape tension by adjusting the one-way tension roller
	Adhesive has built up on blade	Clean and adjust the blade
	The blade is not positioned properly	Make sure the blade is bottomed out against the mounting bolts
	The blade is dry	Lubricate the blade oiler pad on the blade guard
	The blade is in backwards	Mount the blade so that the beveled edge is away from the entrance of the head
	One or both cutter springs are missing or stretched	Replace the defective spring(s)
	Tension roller surface is not fully contacting the taping head frame	Make sure one-way bearing is below the surface of the tension roller. If not, press bearing further into roller or replace roller.
	Taping Head not positioned properly	Adjust Taping Head so there is less than 1/8” gap between case and upper assembly

Troubleshooting Guide

Problem	Cause	Correction
Tape is tabbing on the trailing leg on the back of the box	There is excess tension on the tape drum assembly and/or the one-way tension roller assembly	Adjust the one-way tension roller and/or the tape drum assembly
	Rollers in the tape path do not rotate freely	Clean adhesive deposits from the surface, ends, and shafts of the rollers. Then lubricate roller shafts. Remove all lubricant from roller surfaces.
	The blade is not cutting tape properly	Refer to tape cutting problems
	The tape is threaded incorrectly	Re-thread the tape
	Applying mechanism spring has too little tension	Move spring hook to next tighter hole
The tape end does not stay in application position in front of the applying roller	The tape is incorrectly threaded	Re-thread the tape Adjust tension roller position in mounting slot to lengthen tape leg
	Applying roller overruns on return of applying mechanism to its rest position	There should be a slight drag when rotating the applying roller. If not, check friction springs and/or friction pins and replace if necessary
	The one-way tension roller is defective	Replace the one-way tension roller
Tape not centered on box seam	Tape drum not centered	Reposition tape drum
	Centering guides not centered	Adjust centering guides
	Box flaps not of equal length	Check box specifications

Spare Parts/Service Information

Recommended Spare Parts

Listed below are tools that are included with tape head. These parts should be kept in a convenient location to assist in routine maintenance and set-up of the tape head.

AccuGlide™ V HSP 3" Taping Head - Type 22300

Qty.	Part Number	Description
1	78-8176-4522-7	Tube Wrench (17mm)
1	78-8091-0405-8	Wrench - Open End 19/25

In addition to the tools included with the taping head are a list of suggested spare parts that should be ordered and kept on hand. These parts will require replacement under normal wear of the tape head. The recomended parts are included in 78-0025-1959-9 (SPK - Spare Parts AccuGlide™ V HSP 3") which includes the following:

Qty.	Part Number	Description
2	78-0025-1924-3	Roller - Apply/Buff AG V HSP 3"
1	78-8113-7030-9	Spring - Torsion Blade Guard
1	78-8137-6966-4	Blade 3"
1	78-0025-1814-6	Upper Spring (Silver)
1	78-0025-1815-3	Lower Spring (Black)
2	78-8052-6602-6	Spring - Cutter
1	78-8137-7135-5	Brush Assembly 3" (End)
1	78-0025-1746-0	Brush Assembly 3" (Middle)

Replacement Parts and Service

Refer to the first page of this instruction manual **"Replacement Parts and Service Information".**

Replacement Parts Illustrations and Parts Lists

Description	Part Number
AccuGlide™ V HSP 3" Control Side w/o Blade Retract	70-0099-2001-1
AccuGlide™ V HSP 3" Control Side w/Blade Retract	70-0099-2003-7
AccuGlide™ V HSP 3" Opposite Side w/o Blade Retract	70-0099-2007-8
AccuGlide™ V HSP 3" Opposite Side w/Blade Retract	70-0099-2009-4
AccuGlide™ V HSP 3" Control Side w/Blade Retract LD	70-0099-2005-2
AccuGlide™ V HSP 3" Opposite Side w/Blade Retract LD	70-0099-2011-0

1. Refer to the Taping Head Assemblies Figure to find all the parts illustrations identified by figure numbers.

2. Refer to the figure or figures to determine the individual parts required and the parts reference number.

3. The replacement parts list, that follows each illustration, includes the part number and part description for the parts in that illustration.

Note – The complete description has been included for standard fasteners and some commercially available components. This has been done to allow obtaining these standard parts locally, should the customer elect to do so.

4. Refer to the first page of this instruction manual "Replacement Parts and Service Information" for replacement parts ordering information.

Important – Not all the parts listed are normally stocked items. Some parts or assemblies shown are available only on a special order basis. Contact 3M/Tape Dispenser Parts to confirm item availability.