3M™ TWIN AXIAL PCI EXPRESS JUMPER CABLE ASSEMBLIES GEN 5.0

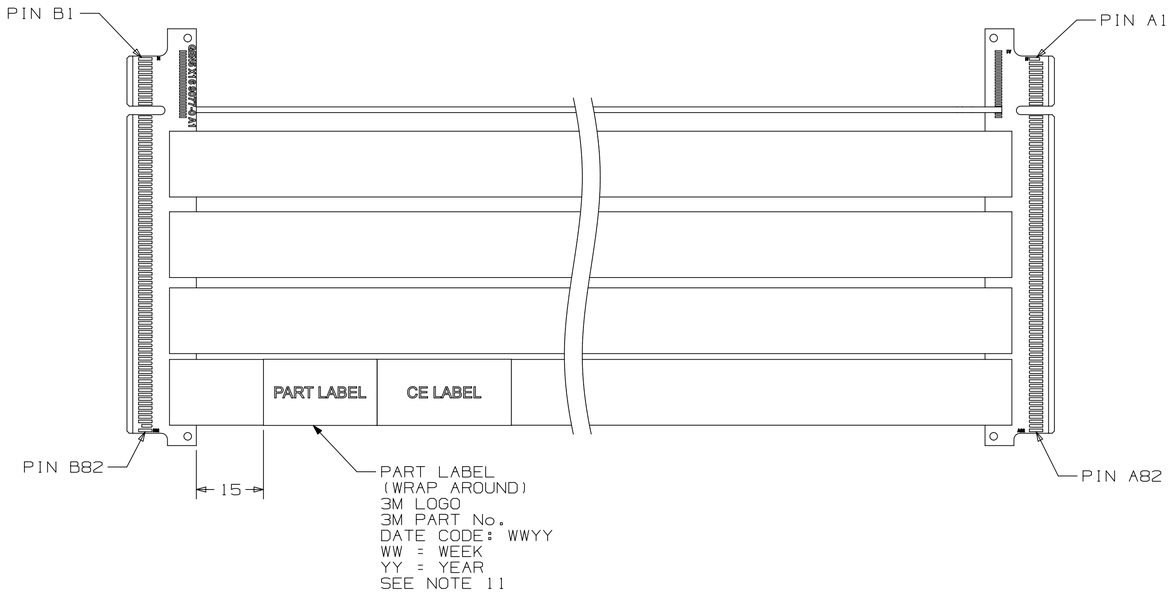

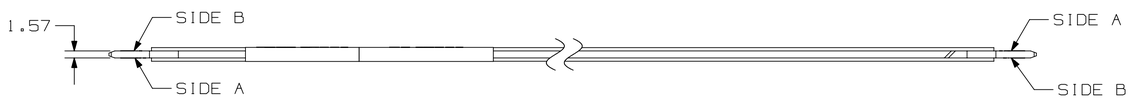

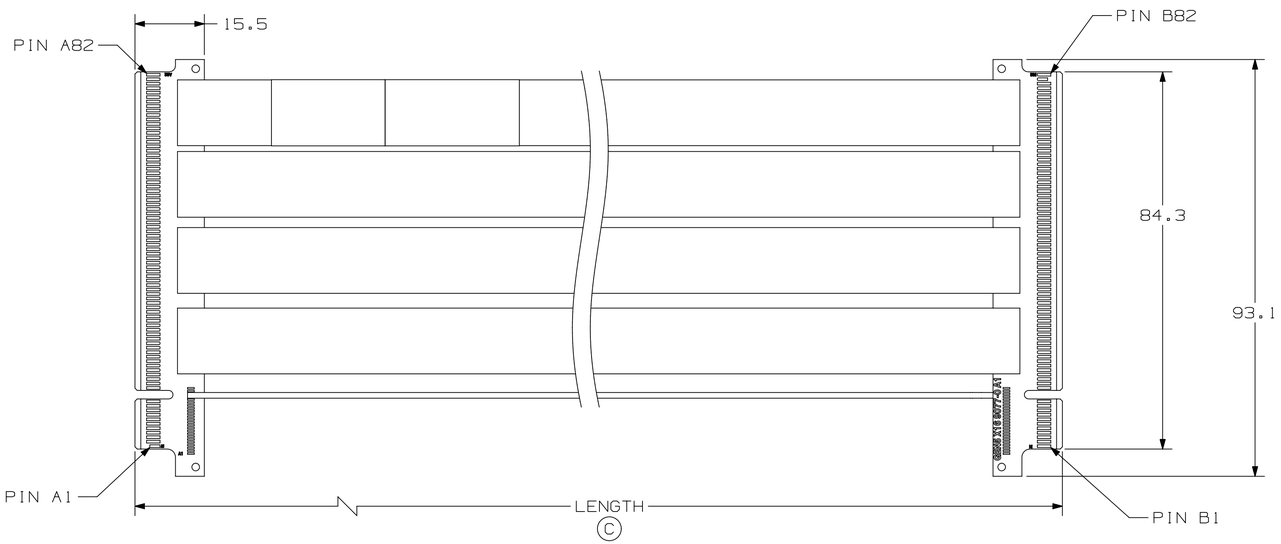

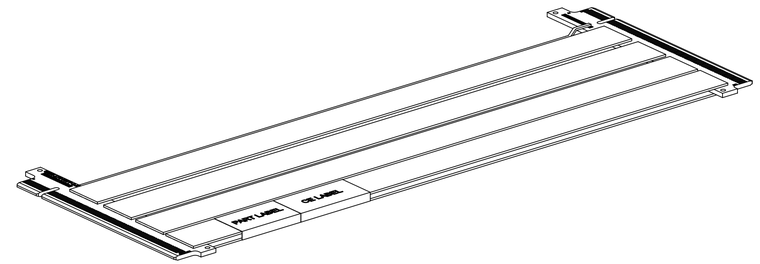

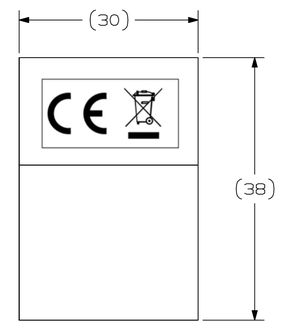

CE WEEE LABEL
(FOR ALL ASSEMBLIES)

×16 CROSS-OVER VERSION ORDERING INFORMATION

8KFH-0987-XXXX

STANDARD LENGTHS DIM. "A"
0250 = [250 MM]
0500 = [500 MM]

NOTE:
NON-STANDARD LENGTHS AVAILABLE UPON REQUEST.
MAY REQUIRE HIGHER MOQ'S AND LONGER LEAD TIMES.

NOTES

1. DIMENSIONS ARE IN MILLIMETERS.
2. 3M TWIN AXIAL CABLE DESCRIPTION:
   30 AWG, SILVER PLATED SIGNAL WIRE
   IMPEDANCE: 87 ±5 OHM
   OVERALL RIBBON WIDTH: 14.56 MM
   OVERALL RIBBON THICKNESS: 0.74 MM
3. REGULATORY INFORMATION:
   VISIT 3M.com/regs OR CONTACT YOUR 3M REPRESENTATIVE TO FIND THE RoHS COMPLIANCE STATUS OF THE 3M PART YOU ARE INTERESTED IN.
4. THIS CABLE CONSTRUCTION HAS A THIN ALUMINUM LAYER AT EACH EDGE. USER SHOULD EVALUATE ITS USE IN THEIR APPLICATION AND, IF NECESSARY, INSULATING TAPE MAY BE APPLIED TO COVER THE ALUMINUM LAYER, AS USER DEEMS APPROPRIATE.
5. PRODUCT SPECIFICATION: PS-0390.
6. FLAMMABILITY RATING
   -TWINAX/AUX RIBBONS: UL758 HORIZONTAL FLAME TEST FOR INTERNAL WIRING
   -PCBS: UL94V-0
7. PADDLECARD PLATING:
   30μ" MIN. GOLD PLATING
   50μ" MIN. NICKEL UNDERPLATING.
8. UNLESS OTHERWISE NOTED, REFERENCES TO INDUSTRY SPECIFICATIONS ARE INTENDED TO INDICATE SUBSTANTIAL COMPLIANCE TO THE MATERIAL ELEMENTS OF THE SPECIFICATION. SUCH REFERENCES SHOULD NOT BE CONSTRUED AS A GUARANTEE OF COMPLIANCE TO ALL REQUIREMENTS IN A GIVEN SPECIFICATION.
9. LENGTH TOLERANCE:
   ±5MM FOR LENGTHS LESS THAN 0.5M.
   ±8MM FOR LENGTHS 0.5 TO 1.0 METER.
10. Ⓒ DENOTES CRITICAL DIMENSION.
11. LABEL LOCATION MAY VARY ON SHORTER CABLE ASSEMBLIES, ≤ 250 MM.
    LABEL MUST NOT LAY ON TOP OF BLACK TAPE.

78-5100-2807-5 DRAWING NUMBER — B REVISION

REV	ECO	ISSUE DATE AND DESCRIPTION	DRFT	CHKD
B	123692	MAY 28,2025 ADD CE LABEL	JNC	MML
A	0120684	JAN 06,2025 PRODUCTION RELEASE	GAW	MML

DESIGN REFERENCE — NEXT ASSEMBLY
ACCESS CODES

DRFT G WELLS	DATE JAN 06,2025	MFG J G LIU	DATE JAN 06,2025
CHKD M LETTANG	DATE JAN 06,2025	APPVL M LETTANG	DATE JAN 06,2025

DIVISION: DO NOT SCALE DRAWING — SCALE
DIVISION CODE: EMSD
TOLERANCES EXCEPT AS NOTED
INCHES: .0 ± ; .00 ± ; .000 ± ; .0000 ±
MILLIMETERS: 0 ±1 ; .0 ±0.5 ; .00 ±0.05 ; .000 ±0.005
ANGLES ±
THIRD ANGLE PROJECTION
INTERPRET PER ASME Y14.5 - 2018
MAX SURFACE ROUGHNESS ☐ ALL SURFACES ☐ MARKED ONLY

3M Center St. Paul, MN 55144

© 3M COPYRIGHT 2025
This document and the information it contains are 3M property and may not be reproduced or further distributed without 3M permission, or used or disclosed other than for 3M authorized purposes. All rights reserved.

TITLE: 3M PCIE JUMPER CABLE ASSY GEN5

CAGE NUMBER | SIZE D | DRAWING NO. 78-5100-2807-5 | REV. B
MODEL GEN 5 | DET. LISTS ☐ YES ☒ NO | SHT 1 OF 6

3M™ Display and Electronics Product Platform, (DEPP)
Transportation and Electronics Business Group (TEBG)
http://www.3M.com/interconnect

3M IS A TRADEMARK OF 3M COMPANY.
FOR TECHNICAL, SALES OR ORDERING INFORMATION CALL 800-225-5373

3M™ TWIN AXIAL PCI EXPRESS JUMPER CABLE ASSEMBLIES GEN 5.0

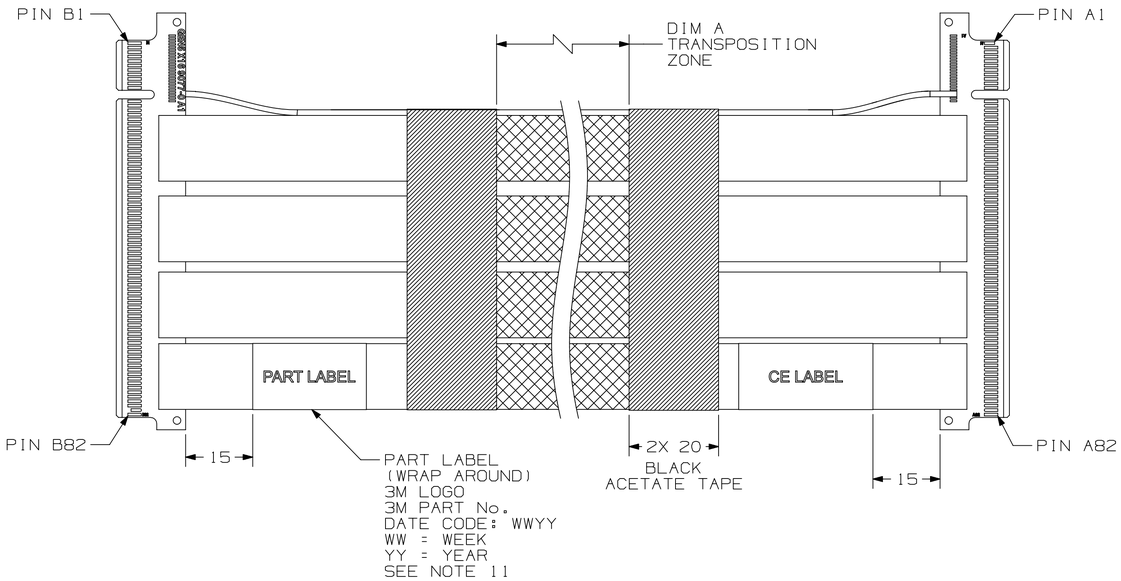

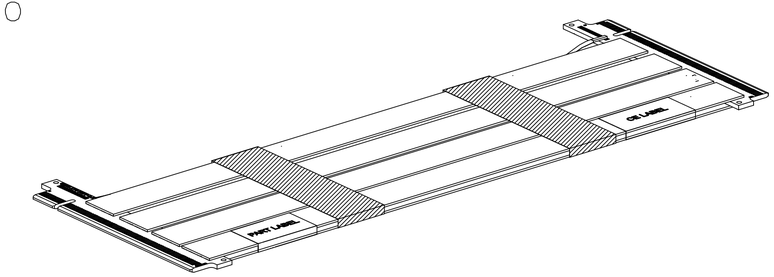

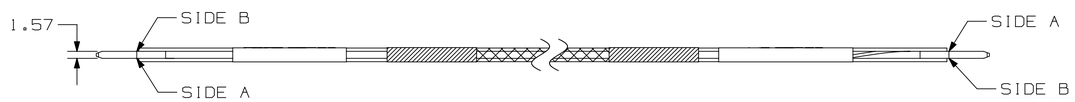

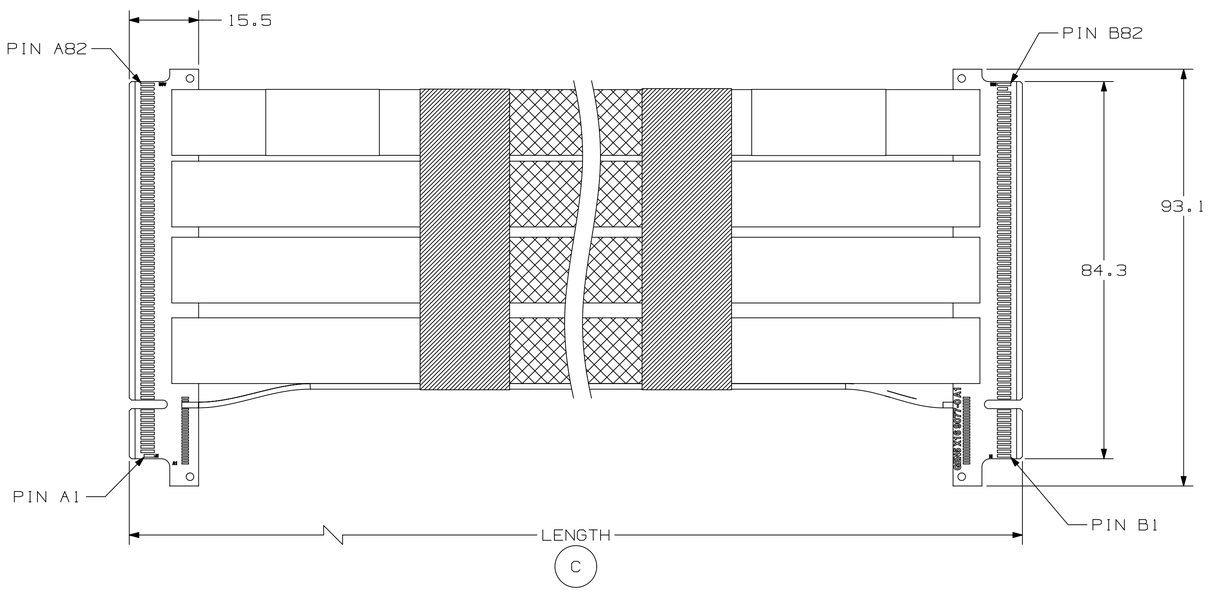

×16 PASS-THRU VERSION ORDERING INFORMATION

8KGH-0990L-XXXX

STANDARD LENGTHS DIM. "A"
0250 = [250 MM]
0500 = [500 MM]

NOTE:
NON-STANDARD LENGTHS AVAILABLE UPON REQUEST.
MAY REQUIRE HIGHER MOQ'S AND LONGER LEAD TIMES.

ASSEMBLY LENGTH	RIBBON TRANSPOSITION ZONE (DIM A)	TAPE WIDTH
0.25 M AND LESS	80 +/- 10 MM	20 +/- 5 MM
> 0.25 M AND < 0.5 M	120 +/- 15 MM	20 +/- 5 MM
0.5 M AND LONGER	160 +/- 20 MM	20 +/- 5 MM

PASS-THRU PINOUT ASSEMBLIES HAVE A RIBBON TRANSPOSITION ZONE, OF LENGTH "A", WHERE THE TOP/BOTTOM RIBBONS OF EACH RIBBON STACK ARE SLIT AND SWAPPED.

NOTES

1. DIMENSIONS ARE IN MILLIMETERS.
2. 3M TWIN AXIAL CABLE DESCRIPTION:
   30 AWG, SILVER PLATED SIGNAL WIRE
   IMPEDANCE: 87 ±5 OHM
   OVERALL RIBBON WIDTH: 14.56 MM
   OVERALL RIBBON THICKNESS: 0.74 MM
3. REGULATORY INFORMATION:
   VISIT 3M.com/regs OR CONTACT YOUR 3M REPRESENTATIVE TO FIND THE RoHS COMPLIANCE STATUS OF THE 3M PART YOU ARE INTERESTED IN.
4. THIS CABLE CONSTRUCTION HAS A THIN ALUMINUM LAYER AT EACH EDGE. USER SHOULD EVALUATE ITS USE IN THEIR APPLICATION AND, IF NECESSARY, INSULATING TAPE MAY BE APPLIED TO COVER THE ALUMINUM LAYER, AS USER DEEMS APPROPRIATE.
5. PRODUCT SPECIFICATION: PS-0390.
6. FLAMMABILITY RATING
   -TWINAX/AUX RIBBONS: UL94 HB HORIZONTAL FLAME TEST FOR INTERNAL WIRING
   -PCBS: UL94V-0
7. PADDLECARD PLATING:
   30μ" MIN. GOLD PLATING
   50μ" MIN. NICKEL UNDERPLATING.
8. UNLESS OTHERWISE NOTED, REFERENCES TO INDUSTRY SPECIFICATIONS ARE INTENDED TO INDICATE SUBSTANTIAL COMPLIANCE TO THE MATERIAL ELEMENTS OF THE SPECIFICATION. SUCH REFERENCES SHOULD NOT BE CONSTRUED AS A GUARANTEE OF COMPLIANCE TO ALL REQUIREMENTS IN A GIVEN SPECIFICATION.
9. LENGTH TOLERANCE:
   ±5MM FOR LENGTHS LESS THAN 0.5M.
   ±8MM FOR LENGTHS 0.5 TO 1.0 METER.
10. (C) DENOTES CRITICAL DIMENSION.
11. LABEL LOCATION MAY VARY ON SHORTER CABLE ASSEMBLIES, ≤ 250 MM.
    LABEL MUST NOT LAY ON TOP OF BLACK TAPE.

78-5100-2807-5 DRAWING NUMBER — B REVISION

REV	ECO	ISSUE DATE AND DESCRIPTION	DRFT	CHKD
B	123692	MAY 28,2025 ADD CE LABEL	JNC	MML
A	0120684	JAN 06,2025 PRODUCTION RELEASE	GAW	MML

DESIGN REFERENCE | NEXT ASSEMBLY | ACCESS CODES

DRFT G WELLS — DATE JAN 06,2025 — MFG J G LIU — DATE JAN 06,2025
CHKD M LETTANG — DATE JAN 06,2025 — APPVL M LETTANG — DATE JAN 06,2025

DIVISION | DIVISION CODE EMSD

DO NOT SCALE DRAWING — SCALE

TOLERANCES EXCEPT AS NOTED
INCHES: .0 ±; .00 ±; .000 ±; .0000 ±
MILLIMETERS: 0 ±1; .0 ±0.5; .00 ±0.05; .000 ±0.005
ANGLES ±

THIRD ANGLE PROJECTION

INTERPRET PER ASME Y14.5 - 2018

MAX SURFACE ROUGHNESS ☐ ALL SURFACES ☐ MARKED ONLY

3M Center St. Paul, MN 55144

© 3M COPYRIGHT 2025
This document and the information it contains are 3M property and may not be reproduced or further distributed without 3M permission, or used or disclosed other than for 3M authorized purposes. All rights reserved.

TITLE: 3M PCIE JUMPER CABLE ASSY GEN5

CAGE NUMBER — SIZE D — DRAWING NO. 78-5100-2807-5 — REV. B
MODEL GEN 5 — DET. LISTS ☐ YES ☒ NO — SHT 2 OF 6

3M™ Display and Electronics Product Platform, (DEPP)
Transportation and Electronics Business Group (TEBG)
http://www.3M.com/interconnect

3M IS A TRADEMARK OF 3M COMPANY.
FOR TECHNICAL, SALES OR ORDERING INFORMATION CALL 800-225-5373

3M™ TWIN AXIAL PCI EXPRESS JUMPER CABLE ASSEMBLIES GEN 5.0

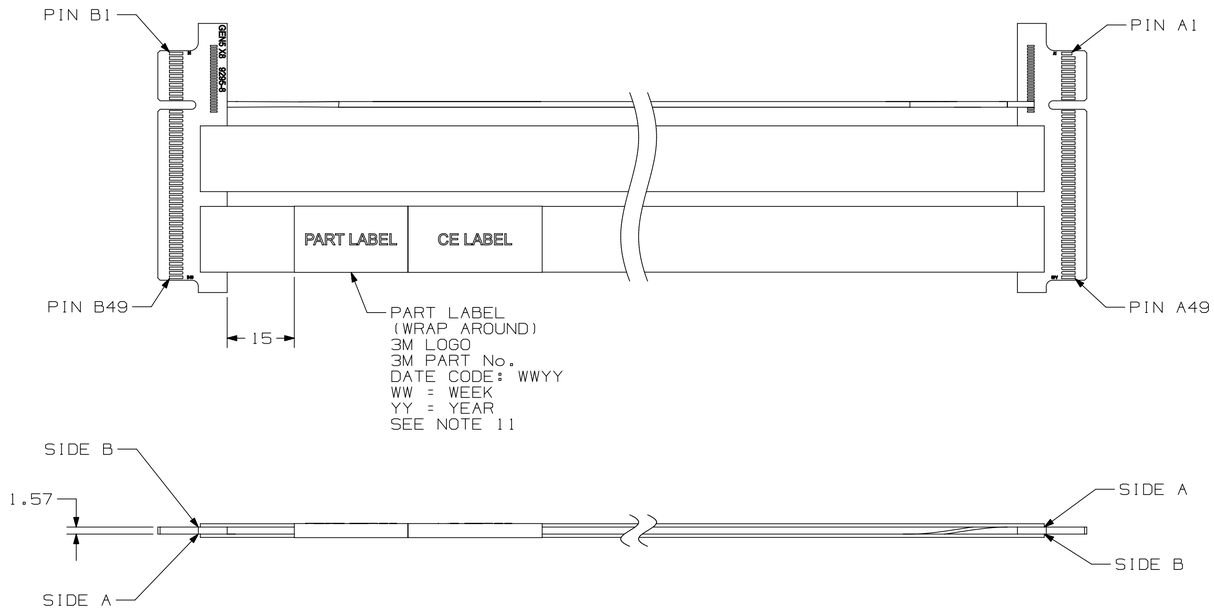

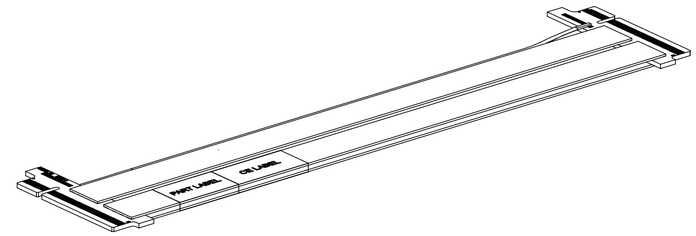

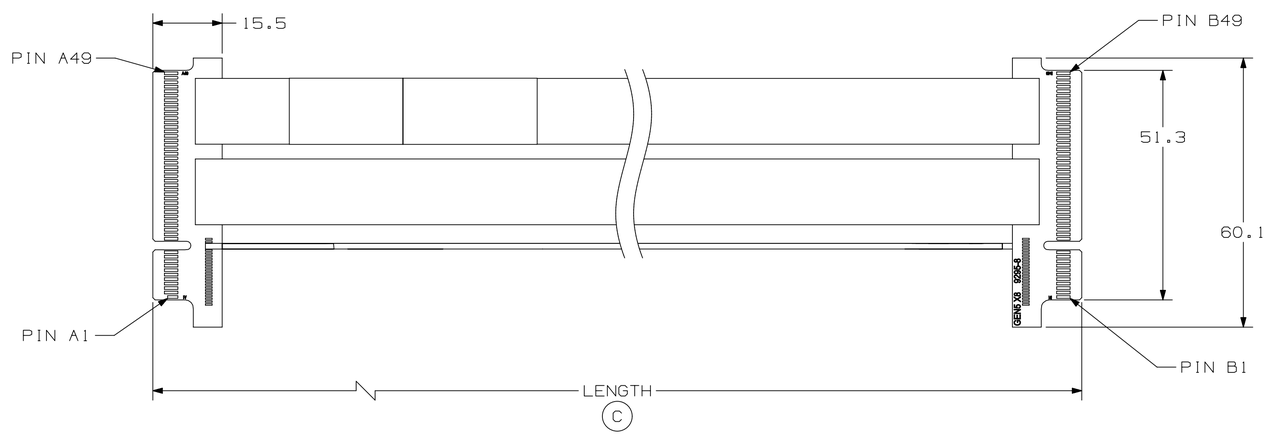

×8 CROSS-OVER VERSION ORDERING INFORMATION

8KF8-0988-XXXX

STANDARD LENGTHS DIM. "A"
0250 = [250 MM]
0500 = [500 MM]

NOTE:
NON-STANDARD LENGTHS AVAILABLE UPON REQUEST.
MAY REQUIRE HIGHER MOQ'S AND LONGER LEAD TIMES.

NOTES

1. DIMENSIONS ARE IN MILLIMETERS.
2. 3M TWIN AXIAL CABLE DESCRIPTION:
   30 AWG, SILVER PLATED SIGNAL WIRE
   IMPEDANCE: 87 ±5 OHM
   OVERALL RIBBON WIDTH: 14.56 MM
   OVERALL RIBBON THICKNESS: 0.74 MM
3. REGULATORY INFORMATION:
   VISIT 3M.com/regs OR CONTACT YOUR 3M REPRESENTATIVE TO FIND THE RoHS COMPLIANCE STATUS OF THE 3M PART YOU ARE INTERESTED IN.
4. THIS CABLE CONSTRUCTION HAS A THIN ALUMINUM LAYER AT EACH EDGE. USER SHOULD EVALUATE ITS USE IN THEIR APPLICATION AND, IF NECESSARY, INSULATING TAPE MAY BE APPLIED TO COVER THE ALUMINUM LAYER, AS USER DEEMS APPROPRIATE.
5. PRODUCT SPECIFICATION: PS-0390.
6. FLAMMABILITY RATING
   -TWINAX/AUX RIBBONS: UL94 HB HORIZONTAL FLAME TEST FOR INTERNAL WIRING
   -PCBS: UL94V-0
7. PADDLECARD PLATING:
   30μ" MIN. GOLD PLATING
   50μ" MIN. NICKEL UNDERPLATING.
8. UNLESS OTHERWISE NOTED, REFERENCES TO INDUSTRY SPECIFICATIONS ARE INTENDED TO INDICATE SUBSTANTIAL COMPLIANCE TO THE MATERIAL ELEMENTS OF THE SPECIFICATION. SUCH REFERENCES SHOULD NOT BE CONSTRUED AS A GUARANTEE OF COMPLIANCE TO ALL REQUIREMENTS IN A GIVEN SPECIFICATION.
9. LENGTH TOLERANCE:
   ±5MM FOR LENGTHS LESS THAN 0.5M.
   ±8MM FOR LENGTHS 0.5 TO 1.0 METER.
10. (C) DENOTES CRITICAL DIMENSION.
11. LABEL LOCATION MAY VARY ON SHORTER CABLE ASSEMBLIES, ≤ 250 MM.
    LABEL MUST NOT LAY ON TOP OF BLACK TAPE.

78-5100-2807-5 DRAWING NUMBER | B REVISION

REV	ECO	ISSUE DATE AND DESCRIPTION	DRFT	CHKD
B	123692	MAY 28,2025 ADD CE LABEL	JNC	MML
A	0120684	JAN 06,2025 PRODUCTION RELEASE	GAW	MML

DESIGN REFERENCE | NEXT ASSEMBLY | ACCESS CODES

DRFT G WELLS DATE JAN 06,2025 | MFG J G LIU DATE JAN 06,2025
CHKD M LETTANG DATE JAN 06,2025 | APPVL M LETTANG DATE JAN 06,2025

DIVISION | DIVISION CODE EMSD

DO NOT SCALE DRAWING | SCALE

TOLERANCES EXCEPT AS NOTED
INCHES .0 ± .00 ± .000 ± .0000 ±
MILLIMETERS 0 ±1 .0 ±0.5 .00 ±0.05 .000 ±0.005
ANGLES ±

THIRD ANGLE PROJECTION

INTERPRET PER ASME Y14.5 - 2018

MAX SURFACE ROUGHNESS ☐ ALL SURFACES ☐ MARKED ONLY

3M Center St. Paul, MN 55144

© 3M COPYRIGHT 2025
This document and the information it contains are 3M property and may not be reproduced or further distributed without 3M permission, or used or disclosed other than for 3M authorized purposes. All rights reserved.

TITLE: 3M PCIE JUMPER CABLE ASSY GEN5

CAGE NUMBER | SIZE D | DRAWING NO. 78-5100-2807-5 | REV. B
MODEL GEN 5 | DET. LISTS ☐ YES ☒ NO | SHT 3 OF 6

3M™ Display and Electronics Product Platform, (DEPP)
Transportation and Electronics Business Group (TEBG)
http://www.3M.com/interconnect

3M IS A TRADEMARK OF 3M COMPANY.
FOR TECHNICAL, SALES OR ORDERING INFORMATION CALL 800-225-5373

3M™ TWIN AXIAL PCI EXPRESS JUMPER CABLE ASSEMBLIES GEN 5.0

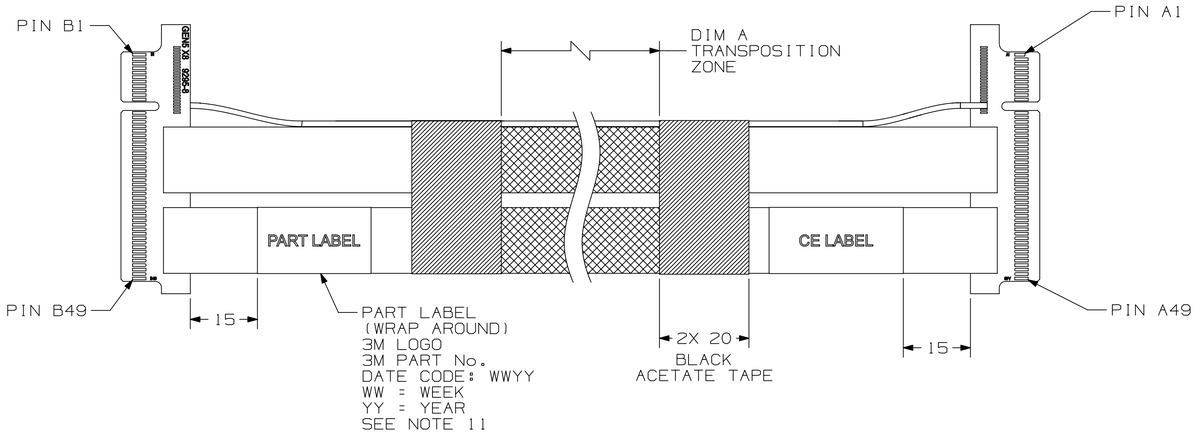

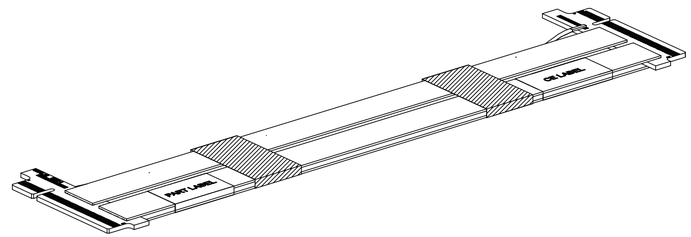

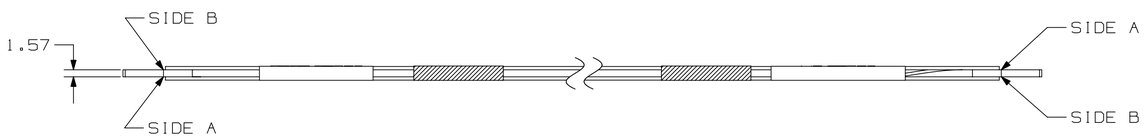

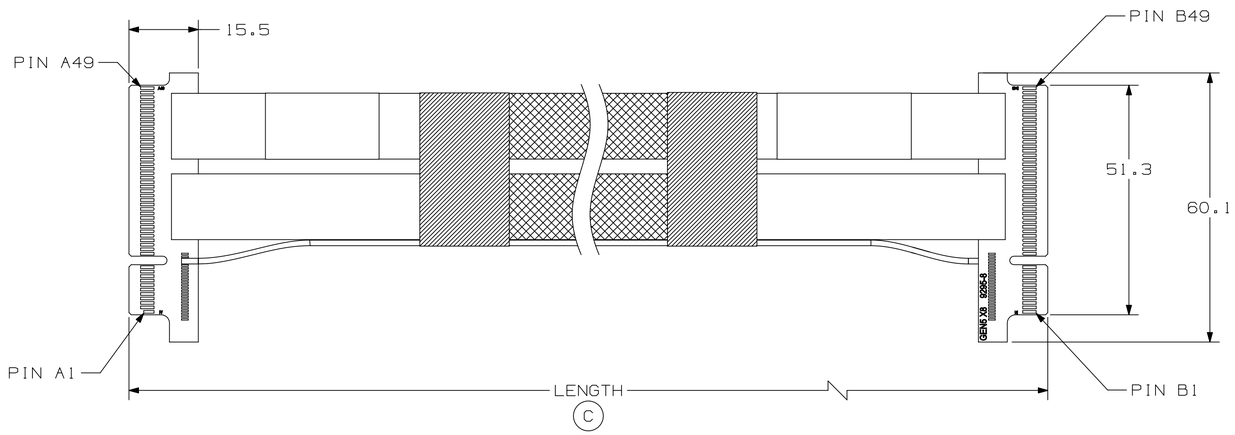

×8 PASS-THRU VERSION ORDERING INFORMATION

8KG8-0991L-XXXX

STANDARD LENGTHS DIM. "A"
0250 = [250 MM]
0500 = [500 MM]

NOTE:
NON-STANDARD LENGTHS AVAILABLE UPON REQUEST.
MAY REQUIRE HIGHER MOQ'S AND LONGER LEAD TIMES.

ASSEMBLY LENGTH	RIBBON TRANSPOSITION ZONE (DIM A)	TAPE WIDTH
0.25 M AND LESS	80 +/- 10 MM	20 +/- 5 MM
> 0.25 M AND < 0.5 M	120 +/- 15 MM	20 +/- 5 MM
0.5 M AND LONGER	160 +/- 20 MM	20 +/- 5 MM

PASS-THRU PINOUT ASSEMBLIES HAVE A RIBBON TRANSPOSITION ZONE, OF LENGTH "A", WHERE THE TOP/BOTTOM RIBBONS OF EACH RIBBON STACK ARE SLIT AND SWAPPED.

NOTES

1. DIMENSIONS ARE IN MILLIMETERS.
2. 3M TWIN AXIAL CABLE DESCRIPTION:
   30 AWG, SILVER PLATED SIGNAL WIRE
   IMPEDANCE: 87 ±5 OHM
   OVERALL RIBBON WIDTH: 14.56 MM
   OVERALL RIBBON THICKNESS: 0.74 MM
3. REGULATORY INFORMATION:
   VISIT 3M.com/regs OR CONTACT YOUR 3M REPRESENTATIVE TO FIND THE RoHS COMPLIANCE STATUS OF THE 3M PART YOU ARE INTERESTED IN.
4. THIS CABLE CONSTRUCTION HAS A THIN ALUMINUM LAYER AT EACH EDGE. USER SHOULD EVALUATE ITS USE IN THEIR APPLICATION AND, IF NECESSARY, INSULATING TAPE MAY BE APPLIED TO COVER THE ALUMINUM LAYER, AS USER DEEMS APPROPRIATE.
5. PRODUCT SPECIFICATION: PS-0390.
6. FLAMMABILITY RATING
   -TWINAX/AUX RIBBONS: UL94 HB HORIZONTAL FLAME TEST FOR INTERNAL WIRING
   -PCBS: UL94V-0
7. PADDLECARD PLATING:
   30μ" MIN. GOLD PLATING
   50μ" MIN. NICKEL UNDERPLATING.
8. UNLESS OTHERWISE NOTED, REFERENCES TO INDUSTRY SPECIFICATIONS ARE INTENDED TO INDICATE SUBSTANTIAL COMPLIANCE TO THE MATERIAL ELEMENTS OF THE SPECIFICATION. SUCH REFERENCES SHOULD NOT BE CONSTRUED AS A GUARANTEE OF COMPLIANCE TO ALL REQUIREMENTS IN A GIVEN SPECIFICATION.
9. LENGTH TOLERANCE:
   ±5MM FOR LENGTHS LESS THAN 0.5M.
   ±8MM FOR LENGTHS 0.5 TO 1.0 METER.
10. (C) DENOTES CRITICAL DIMENSION.
11. LABEL LOCATION MAY VARY ON SHORTER CABLE ASSEMBLIES, ≤ 250 MM.
    LABEL MUST NOT LAY ON TOP OF BLACK TAPE.

REV	ECO	ISSUE DATE AND DESCRIPTION	DRFT	CHKD
B	123692	MAY 28,2025 ADD CE LABEL	JNC	MML
A	0120684	JAN 06,2025 PRODUCTION RELEASE	GAW	MML

DESIGN REFERENCE | NEXT ASSEMBLY
ACCESS CODES
DRFT G WELLS — DATE JAN 06,2025 — MFG J G LIU — DATE JAN 06,2025
CHKD M LETTANG — DATE JAN 06,2025 — APPV M LETTANG — DATE JAN 06,2025
DIVISION
DIVISION CODE EMSD
DO NOT SCALE DRAWING — SCALE
TOLERANCES EXCEPT AS NOTED
INCHES .0 ± .00 ± .000 ± .0000 ±
THIRD ANGLE PROJECTION
INTERPRET PER ASME Y14.5 - 2018
MILLIMETERS 0 ±1 .0 ±0.5 .00 ±0.05 .000 ±0.005
MAX SURFACE ROUGHNESS ☐ ALL SURFACES ☐ MARKED ONLY
ANGLES ±

3M Center St. Paul, MN 55144

© 3M COPYRIGHT 2025
This document and the information it contains are 3M property and may not be reproduced or further distributed without 3M permission, or used or disclosed other than for 3M authorized purposes. All rights reserved.

TITLE
3M PCIE JUMPER CABLE ASSY GEN5

CAGE NUMBER — SIZE D — DRAWING NO. 78-5100-2807-5 — REV. B
MODEL GEN 5 — DET. LISTS ☐ YES ☒ NO — SHT 4 OF 6

78-5100-2807-5 DRAWING NUMBER — B REVISION

3M™ Display and Electronics Product Platform, (DEPP)
Transportation and Electronics Business Group (TEBG)
http://www.3M.com/interconnect

3M IS A TRADEMARK OF 3M COMPANY.
FOR TECHNICAL, SALES OR ORDERING INFORMATION CALL 800-225-5373

3M™ TWIN AXIAL PCI EXPRESS JUMPER CABLE ASSEMBLIES GEN 5.0

X16 PINOUTS

X16 PCIe CROSS-OVER JUMPER PINOUT

P0 PINS	P0 SIGNAL NAME	P1 SIGNAL NAME	P1 PINS
A13	REFCLK	REFCLK	A13
A14			A14
A16	Rx00	Tx00	B14
A17			B15
A21	Rx01	Tx01	B19
A22			B20
A25	Rx02	Tx02	B23
A26			B24
A29	Rx03	Tx03	B27
A30			B28
A35	Rx04	Tx04	B33
A36			B34
A39	Rx05	Tx05	B37
A40			B38
A43	Rx06	Tx06	B41
A44			B42
A47	Rx07	Tx07	B45
A48			B46
A52	Rx08	Tx08	B50
A53			B51
A56	Rx09	Tx09	B54
A57			B55
A60	Rx10	Tx10	B58
A61			B59
A64	Rx11	Tx11	B62
A65			B63
A68	Rx12	Tx12	B66
A69			B67
A72	Rx13	Tx13	B70
A73			B71
A76	Rx14	Tx14	B74
A77			B75
A80	Rx15	Tx15	B78
A81			B79

P0 PINS	P0 SIGNAL NAME	P1 SIGNAL NAME	P1 PINS
B14	Tx00	Rx00	A16
B15			A17
B19	Tx01	Rx01	A21
B20			A22
B23	Tx02	Rx02	A25
B24			A26
B27	Tx03	Rx03	A29
B28			A30
B33	Tx04	Rx04	A35
B34			A36
B37	Tx05	Rx05	A39
B38			A40
B41	Tx06	Rx06	A43
B42			A44
B45	Tx07	Rx07	A47
B46			A48
B50	Tx08	Rx08	A52
B51			A53
B54	Tx09	Rx09	A56
B55			A57
B58	Tx10	Rx10	A60
B59			A61
B62	Tx11	Rx11	A64
B63			A65
B66	Tx12	Rx12	A68
B67			A69
B70	Tx13	Rx13	A72
B71			A73
B74	Tx14	Rx14	A76
B75			A77
B78	Tx15	Rx15	A80
B79			A81

PINOUT NOTES:
1. ALL GROUNDS ARE TIED TOGETHER IN PCB'S.
2. ALL POWER/AUX POSITIONS (NOT SHOWN IN PINOUT TABLE) ARE NO-CONNECT BETWEEN THE PCB'S.

X16 PCIe PASS-THRU JUMPER PINOUT

P0 PINS	P0 SIGNAL NAME	P1 SIGNAL NAME	P1 PINS
A13	REFCLK	REFCLK	A13
A14			A14
A16	Rx00	Rx00	A16
A17			A17
A21	Rx01	Rx01	A21
A22			A22
A25	Rx02	Rx02	A25
A26			A26
A29	Rx03	Rx03	A29
A30			A30
A35	Rx04	Rx04	A35
A36			A36
A39	Rx05	Rx05	A39
A40			A40
A43	Rx06	Rx06	A43
A44			A44
A47	Rx07	Rx07	A47
A48			A48
A52	Rx08	Rx08	A52
A53			A53
A56	Rx09	Rx09	A56
A57			A57
A60	Rx10	Rx10	A60
A61			A61
A64	Rx11	Rx11	A64
A65			A65
A68	Rx12	Rx12	A68
A69			A69
A72	Rx13	Rx13	A72
A73			A73
A76	Rx14	Rx14	A76
A77			A77
A80	Rx15	Rx15	A80
A81			A81

P0 PINS	P0 SIGNAL NAME	P1 SIGNAL NAME	P1 PINS
B14	Tx00	Tx00	B14
B15			B15
B19	Tx01	Tx01	B19
B20			B20
B23	Tx02	Tx02	B23
B24			B24
B27	Tx03	Tx03	B27
B28			B28
B33	Tx04	Tx04	B33
B34			B34
B37	Tx05	Tx05	B37
B38			B38
B41	Tx06	Tx06	B41
B42			B42
B45	Tx07	Tx07	B45
B46			B46
B50	Tx08	Tx08	B50
B51			B51
B54	Tx09	Tx09	B54
B55			B55
B58	Tx10	Tx10	B58
B59			B59
B62	Tx11	Tx11	B62
B63			B63
B66	Tx12	Tx12	B66
B67			B67
B70	Tx13	Tx13	B70
B71			B71
B74	Tx14	Tx14	B74
B75			B75
B78	Tx15	Tx15	B78
B79			B79

PINOUT NOTES:
1. ALL GROUNDS ARE TIED TOGETHER IN PCB'S.
2. ALL POWER/AUX POSITIONS (NOT SHOWN IN PINOUT TABLE) ARE NO-CONNECT BETWEEN THE PCB'S.

REV	ECO	ISSUE DATE AND DESCRIPTION	DRFT	CHKD
B	123692	MAY 28,2025 ADD CE LABEL	JNC	MML
A	0120684	JAN 06,2025 PRODUCTION RELEASE	GAW	MML

DESIGN REFERENCE | NEXT ASSEMBLY | ACCESS CODES

DRFT G WELLS DATE JAN 06,2025 | MFG J G LIU DATE JAN 06,2025
CHKD M LETTANG DATE JAN 06,2025 | APPVL M LETTANG DATE JAN 06,2025

DIVISION | DIVISION CODE EMSD

DO NOT SCALE DRAWING | SCALE

THIRD ANGLE PROJECTION

INTERPRET PER ASME Y14.5 - 2018

MAX SURFACE ROUGHNESS ☐ ALL SURFACES ☐ MARKED ONLY

TOLERANCES EXCEPT AS NOTED
INCHES: .0 ±; .00 ±; .000 ±; .0000 ±
MILLIMETERS: 0 ±1; .0 ±0.5; .00 ±0.05; .000 ±0.005
ANGLES ±

3M Center St. Paul, MN 55144

© 3M COPYRIGHT 2025
This document and the information it contains are 3M property and may not be reproduced or further distributed without 3M permission, or used or disclosed other than for 3M authorized purposes. All rights reserved.

TITLE: 3M PCIE JUMPER CABLE ASSY GEN5

CAGE NUMBER | SIZE D | DRAWING NO. 78-5100-2807-5 | REV. B
MODEL GEN 5 | DET. LISTS ☐ YES ☒ NO | SHT 5 OF 6

78-5100-2807-5 DRAWING NUMBER | B REVISION

3M™ Display and Electronics Product Platform, (DEPP)
Transportation and Electronics Business Group (TEBG)
http://www.3M.com/interconnect

3M IS A TRADEMARK OF 3M COMPANY.
FOR TECHNICAL, SALES OR ORDERING INFORMATION CALL 800-225-5373

3M™ TWIN AXIAL PCI EXPRESS JUMPER CABLE ASSEMBLIES GEN 5.0

X8 PINOUTS

X8 PCIe CROSS-OVER JUMPER PINOUT

P0 PINS	P0 SIGNAL NAME	P1 SIGNAL NAME	P1 PINS
A13	REFCLK	REFCLK	A13
A14			A14
A16	Rx00	Tx00	B14
A17			B15
A21	Rx01	Tx01	B19
A22			B20
A25	Rx02	Tx02	B23
A26			B24
A29	Rx03	Tx03	B27
A30			B28
A35	Rx04	Tx04	B33
A36			B34
A39	Rx05	Tx05	B37
A40			B38
A43	Rx06	Tx06	B41
A44			B42
A47	Rx07	Tx07	B45
A48			B46

P0 PINS	P0 SIGNAL NAME	P1 SIGNAL NAME	P1 PINS
B14	Tx00	Rx00	A16
B15			A17
B19	Tx01	Rx01	A21
B20			A22
B23	Tx02	Rx02	A25
B24			A26
B27	Tx03	Rx03	A29
B28			A30
B33	Tx04	Rx04	A35
B34			A36
B37	Tx05	Rx05	A39
B38			A40
B41	Tx06	Rx06	A43
B42			A44
B45	Tx07	Rx07	A47
B46			A48
B50	Tx08	Rx08	A52
B51			A53

PINOUT NOTES:
1. ALL GROUNDS ARE TIED TOGETHER IN PCB'S.
2. ALL POWER/AUX POSITIONS (NOT SHOWN IN PINOUT TABLE) ARE NO-CONNECT BETWEEN THE PCB'S.

X8 PCIe PASS-THRU JUMPER PINOUT

P0 PINS	P0 SIGNAL NAME	P1 SIGNAL NAME	P1 PINS
A13	REFCLK	REFCLK	A13
A14			A14
A16	Rx00	Rx00	A16
A17			A17
A21	Rx01	Rx01	A21
A22			A22
A25	Rx02	Rx02	A25
A26			A26
A29	Rx03	Rx03	A29
A30			A30
A35	Rx04	Rx04	A35
A36			A36
A39	Rx05	Rx05	A39
A40			A40
A43	Rx06	Rx06	A43
A44			A44
A47	Rx07	Rx07	A47
A48			A48

P0 PINS	P0 SIGNAL NAME	P1 SIGNAL NAME	P1 PINS
B14	Tx00	Tx00	B14
B15			B15
B19	Tx01	Tx01	B19
B20			B20
B23	Tx02	Tx02	B23
B24			B24
B27	Tx03	Tx03	B27
B28			B28
B33	Tx04	Tx04	B33
B34			B34
B37	Tx05	Tx05	B37
B38			B38
B41	Tx06	Tx06	B41
B42			B42
B45	Tx07	Tx07	B45
B46			B46

PINOUT NOTES:
1. ALL GROUNDS ARE TIED TOGETHER IN PCB'S.
2. ALL POWER/AUX POSITIONS (NOT SHOWN IN PINOUT TABLE) ARE NO-CONNECT BETWEEN THE PCB'S.

Regulatory: For regulatory information about this product, visit 3M.com/regs or contact your 3M representative.

Technical Information: The technical information, guidance, and other statements contained in this document or otherwise provided by 3M are based upon records, tests, or experience that 3M believes to be reliable, but the accuracy, completeness, and representative nature of such information is not guaranteed. Such information is intended for people with knowledge and technical skills sufficient to assess and apply their own informed judgment to the information. No license under any 3M or third party intellectual property rights is granted or implied with this information.

Product Use: Many factors beyond 3M's control and uniquely within user's knowledge and control can affect the use and performance of a 3M product in a particular application. As a result, customer is solely responsible for evaluating the product and determining whether it is appropriate and suitable for customer's application, including conducting a workplace hazard assessment and reviewing all applicable regulations and standards (e.g., OSHA, ANSI, etc.). Failure to properly evaluate, select, and use a 3M product in accordance with all applicable instructions and with appropriate safety equipment, or to meet all applicable safety regulations, may result in injury, sickness, death, and/or harm to property.

Warranty, Limited Remedy, and Disclaimer: Unless a different warranty is specifically stated on the applicable 3M product packaging or product literature (in which case such warranty governs), 3M warrants that each 3M product meets the applicable 3M product specification at the time 3M ships the product. 3M MAKES NO OTHER WARRANTIES OR CONDITIONS, EXPRESS OR IMPLIED, INCLUDING, BUT NOT LIMITED TO, ANY IMPLIED WARRANTY OR CONDITION OF MERCHANTABILITY, FITNESS FOR A PARTICULAR PURPOSE, OR ANY IMPLIED WARRANTY OR CONDITION ARISING OUT OF A COURSE OF DEALING, CUSTOM, OR USAGE OF TRADE. If a 3M product does not conform to this warranty, then the sole and exclusive remedy is, at 3M's option, replacement or repair of the 3M product or refund of the purchase price.

Limitation of Liability: Except for the limited remedy stated above, and except to the extent prohibited by applicable law, 3M will not be liable for any loss or damage arising from or related to the 3M product, whether direct, indirect, special, incidental, or consequential (including, but not limited to, lost profits or business opportunity), regardless of the legal or equitable theory asserted, including, but not limited to, warranty, contract, negligence, or strict liability.

Disclaimer: For industrial use only. Not intended, labeled or packaged for consumer sale or use.

3M Company
Electronics Materials Solutions Division
13011 McCallen Pass, Bldg. C
Austin, TX 78753-5380
1-800-225-5373
www.3M.com/interconnect

3M™ Display and Electronics Product Platform, (DEPP)
Transportation and Electronics Business Group (TEBG)
http://www.3M.com/interconnect

3M IS A TRADEMARK OF 3M COMPANY.
FOR TECHNICAL, SALES OR ORDERING INFORMATION CALL 800-225-5373

REV	ECO	ISSUE DATE AND DESCRIPTION	DRFT	CHKD
B	123692	MAY 28,2025 ADD CE LABEL	JNC	MML
A	0120684	JAN 06,2025 PRODUCTION RELEASE	GAW	MML

DESIGN REFERENCE | NEXT ASSEMBLY
ACCESS CODES
DRFT G WELLS DATE JAN 06,2025 MFG J G LIU DATE JAN 06,2025
CHKD M LETTANG DATE JAN 06,2025 APPVL M LETTANG DATE JAN 06,2025
DIVISION | DIVISION CODE EMSD
DO NOT SCALE DRAWING | SCALE
TOLERANCES EXCEPT AS NOTED
INCHES .0 ± .00 ± .000 ± .0000 ±
THIRD ANGLE PROJECTION
INTERPRET PER ASME Y14.5 - 2018
MILLIMETERS 0 ±1 .0 ±0.5 .00 ±0.05 .000 ±0.005
MAX SURFACE ROUGHNESS ☐ ALL SURFACES ☐ MARKED ONLY
ANGLES ±

3M 3M Center St. Paul, MN 55144
© 3M COPYRIGHT 2025
This document and the information it contains are 3M property and may not be reproduced or further distributed without 3M permission, or used or disclosed other than for 3M authorized purposes. All rights reserved.

TITLE
3M PCIE JUMPER CABLE ASSY GEN5

CAGE NUMBER | SIZE D | DRAWING NO. 78-5100-2807-5 | REV. B
MODEL GEN 5 | DET. LISTS ☐ YES ☒ NO | SHT 6 OF 6

78-5100-2807-5 DRAWING NUMBER | B REVISION