The Ultimate in Fall Protection

INSTRUCTION MANUAL

CSA Z259.2.2 Type 2 (SRL)	OSHA
CSA Z259.2.2 Type 3 (RSRL)	

ULTRA-LOK™
SELF-RETRACTING DEVICES

Model Numbers: *(See Figure 1.)*

Figure 1 – Ultra-Lok™ Self-Retracting Lifelines with Integral Rescue (SLR-R)

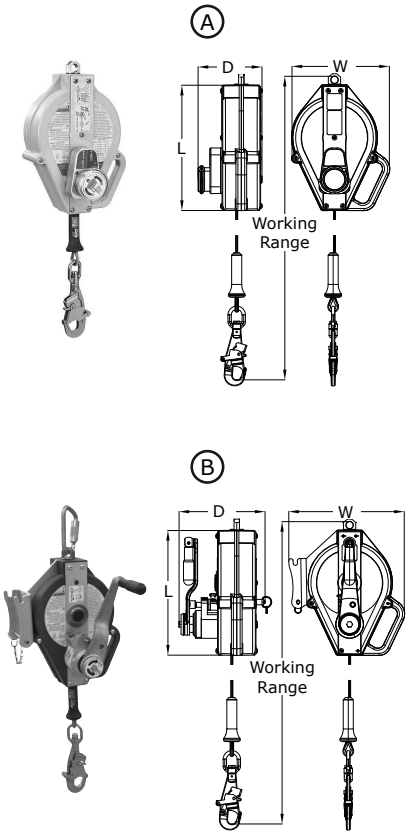

	Model	RSQ	Retrieval	Housing	Lifeline	Range[1]	Hook	Capacity	L	W	D
A	3504550C	✓		Thermoplastic	Galvanized	50 ft (15.2 m)	9502194	310 lbs (141 kg)	11.7 in (29.7 cm)	9.1 in (23.2 cm)	5.9 in (15.1 cm)
A	3504551C	✓		Thermoplastic	Stainless Steel	50 ft (15.2 m)	9502194	310 lbs (141 kg)	11.7 in (29.7 cm)	9.1 in (23.2 cm)	5.9 in (15.1 cm)
A	3504552C	✓		Thermoplastic	Stainless Steel	50 ft (15.2 m)	2100044	310 lbs (141 kg)	11.7 in (29.7 cm)	9.1 in (23.2 cm)	5.9 in (15.1 cm)
A	3504556C	✓		Thermoplastic	Aircraft 316 Stainless Steel	50 ft (15.2 m)	2100044	310 lbs (141 kg)	11.7 in (29.7 cm)	9.1 in (23.2 cm)	5.9 in (15.1 cm)
B	3501104		✓	Thermoplastic	Galvanized	50 ft (15.2 m)	9502194	310 lbs (141 kg)	11.5 in (29.2 cm)	10.5 in (26.7 cm)	7.2 in (18.29 cm)
B	3501105		✓	Thermoplastic	Stainless Steel	50 ft (15.2 m)	2100044	310 lbs (141 kg)	11.5 in (29.2 cm)	10.5 in (26.7 cm)	7.2 in (18.29 cm)

1 *In addition to the Working Range, there is a 2 ft (61 cm) Emergency Reserve.*

Maximum Arrest Force:	900 lbs (4 kN)
Average Arrest Force:	900 lbs (4 Kn)
Maximum Arrest Distance:	54 in (1.4 m)
Average Locking Speed:	4.5 ft/s (1.4 m/s)
RSQ Descent Speed Range:	2-3 ft/s (0.6 - 0.9 m/s)

Lifeline:	Galvanized Steel - Min. Tensile Strength 4,200 lbs (18.7 kN) Stainless Steel - Min. Tensile Strength 3,600 lbs (16.0 kN)	**Motor Spring:**	Stainless Steel
Drum:	Aluminum	**Swivel Assembly:**	Alloy Steel
Side Plates:	Aluminum	**Connecting Hook:**	Alloy Steel or Stainless Steel
Fasteners:	Stainless Steel	**RSQ Knob and Descent Housing:**	Anodized Aluminium
Main Shaft:	Stainless Steel	**Retrieval Hand Crank**	Arm - Stainless Steel Handle - Polymer
Locking Pawls:	Stainless Steel	**Retrieval Housing**	Aluminum

Hook	Description	Material	Gate Strength	Throat Size
2100044	Swiveling Self-Locking Snap Hook with Impact Indicator	Stainless Steel	3,600 lbs (16 kN)	3/4 in (1.9 cm)
9502194	Swiveling Self-Locking Snap Hook with Impact Indicator	Alloy Steel	3,600 lbs (16 kN)	3/4 in (1.9 cm)

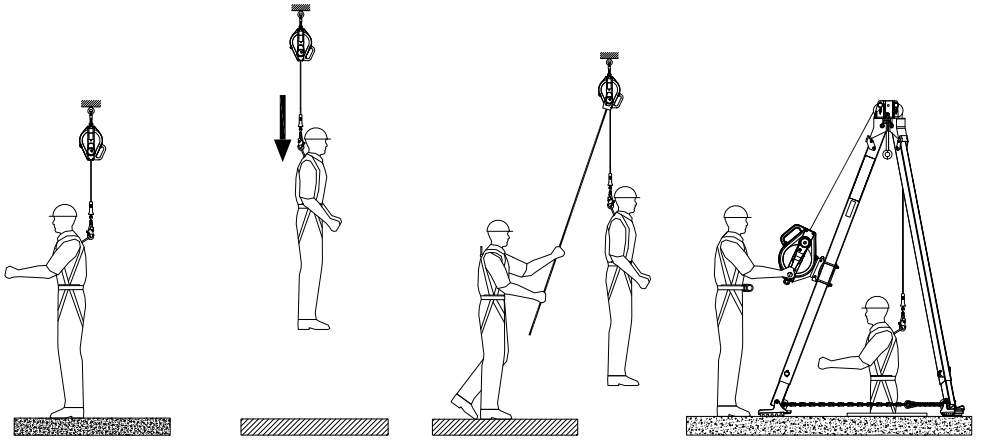

© Copyright 2015, Capital Safety

WARNING: *This product is part of a personal fall arrest or rescue system. The user must follow the manufacturer's instructions for each component of the system. These instructions must be provided to the user of this equipment. The user must read and understand these instructions before using this equipment. Manufacturer's instructions must be followed for proper use and maintenance of this equipment. Alterations or misuse of this product or failure to follow instructions may result in serious injury or death.*

IMPORTANT: *If you have questions on the use, care, or suitability of this equipment for your application, contact Capital Safety.*

IMPORTANT: *Before using this equipment, record the product identification information from the ID label in the 'Inspection and Maintenance Log' at the back of this manual.*

DESCRIPTION:

Figure 2 identifies key components of the Ultra-Lok™ Self-Retracting Lanyards (SRLs) and Self-Retracting Lanyards with Retrieval (RSRL). The Ultra-Lok SRLs covered in this Instruction Manual are drum wound Wire Rope Lifelines (C) which retract into a thermoplastic or aluminum Housing (B). They hang from overhead anchorage by a Carabiner attached through the Swivel Eye (A) on the top of the SRL. A Self-Locking Snap Hook (E) on the end of the Lifeline attaches to the designated Fall Arrest connection on a Full Body Harness. A Bumper (D), equipped with an i-Safe RFID Tag, protects the Wire Rope and Ferrules securing the Snap Hook from abrasion and corrosion. Ultra-Lok SRL models are available with RSQ Dual-Mode Rescue/Descent or 3-Way Emergency Retrieval options.

- **ULTRA-LOK™ RSQ™ SRL MODELS:** Ultra-Lok RSQ SRLs are equipped with an RSQ Rescue/Descent Knob (F) for automatic or assisted Rescue Descent.
- **ULTRA-LOK™ 3-WAY EMERGENCY RETRIEVAL RSRL MODELS:** Ultra-Lok Retrieval SRLs are equipped with a Rescue Hand Crank (G) and Tripod Mounting Bracket (H) for Confined Space Entry and Rescue Retrieval.

Figure 2 – Ultra-Lok™ Self-Retracting Lanyard (SRL) Components

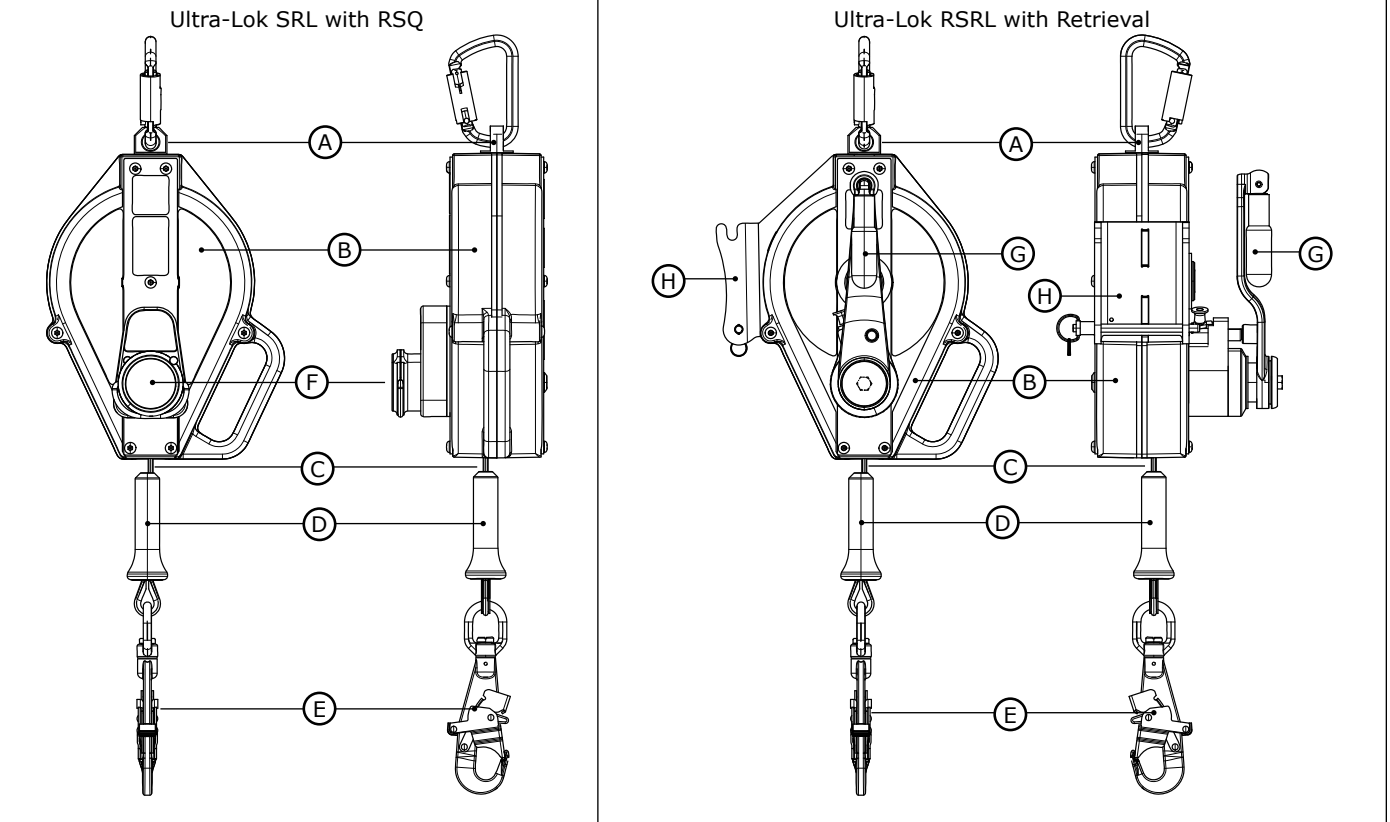

A -Swivel Eye **B** - Housing **C** - Lifeline **D** - Bumper **E** - Self-Locking Snap Hook
F - RSQ Rescue/Descent Knob **G** - Rescue Hand Crank **H** - Mounting Bracket

1.0 APPLICATIONS

1.1 PURPOSE: Capital Safety Self-Retracting Lanyards (SRLs) are designed to be a component in a personal fall arrest system (PFAS). Figure 1 illustrates SRLs covered by this instruction manual and their typical applications. They may be used in most situations where a combination of worker mobility and fall protection is required (i.e. inspection work, general construction, maintenance work, oil production, confined space work, etc.). Some SRL models are equipped with integral rescue capability in the form of an RSQ™ Fall Arrest/Descent Selection Knob or 3-Way Retrieval Hand Crank,

1.2 STANDARDS: Your SRL conforms to the national or regional standard(s) identified on the front cover of these instructions.

1.3 TRAINING: This equipment is intended to be used by persons trained in its correct application and use. It is the responsibility of the user to assure they are familiar with these instructions and are trained in the correct care and use of this equipment. Users must also be aware of the operating characteristics, application limits, and the consequences of improper use.

1.4 LIMITATIONS: Always consider the following limitations and requirements when installing or using this equipment:

- **Capacity:** This SRL has been compliance tested for use by one person with a combined weight (clothing, tools, etc.) from 130 lbs (59 kg) to 310 lbs (141 kg).[1] Make sure all of the components in your system are rated to a capacity appropriate to your application.
- **Anchorage:** Anchorages selected for fall arrest systems shall have a strength capable of sustaining static loads applied in the directions permitted by the system of at least:

  1. 5,000 lbs. (22.2 kN) for non-certified anchorages, or
  2. Two times the maximum arresting force for certified anchorages.

  When more than one fall arrest system is attached to an anchorage, the strengths set forth in (1) and (2) above shall be multiplied by the number of systems attached to the anchorage.

  > ***FROM OSHA 1926.500 AND 1910.66:*** *Anchorages used for attachment of personal fall arrest systems shall be independent of any anchorage being used to support or suspend platforms, and capable of supporting at least 5,000 lbs. per user attached, or be designed, installed, and used as part of a complete personal fall arrest systems which maintains a safety factor of at least two, and is under the supervision of a qualified person. In Canada, refer to local regulations where applicable.*

- **Locking Speed:** Situations which do not allow for an unobstructed fall path should be avoided. Working in confined or cramped spaces may not allow the body to reach sufficient speed to cause the SRL to lock if a fall occurs. Working on slowly shifting material, such as sand or grain,may not allow enough speed buildup to cause the SRL to lock. A clear path is required to assure positive locking of the SRL.
- **Free fall:** When used correctly, SRLs will limit the free fall distance to 2 ft. (61 cm). To avoid increased fall distances, do not work above the anchorage level. **Do not lengthen SRLs by connecting a lanyard or similar component without consulting Capital Safety.** Never clamp, knot, or prevent the lifeline from retracting or being taut. Avoid slack line.
- **Swing Falls:** Swing Falls occur when the anchorage point is not directly above the point where a fall occurs. The force of striking an object in a swing fall may cause serious injury (see Figure 3A). Minimize swing falls by working as directly below the anchorage point as possible.
- **Fall Clearance:** Figure 3B illustrates Fall Clearance. SRL Fall Arrest Systems should have a minimum Fall Clearance of 6 ft (2 m) for falls from a standing position where the SRL is anchored directly overhead. Falls from a kneeling or crouching position will require an additional 3 ft (1 m) of Fall Clearance. In a swing fall situation, the total vertical fall distance will be greater than if the user had fallen directly below the anchorage point and may require additional Fall Clearance. The table in Figure 3 provides the minimum vertical Fall Clearance needed below the working level of the SRL user where added Swing Fall distance is within the recommended range of use.
- **Hazards:** Use of this equipment in areas where surrounding hazards exist may require additional precautions to reduce the possibility of injury to the user or damage to the equipment. Hazards may include, but are not limited to: high heat, caustic chemicals, corrosive environments, high voltage power lines, explosive or toxic gases, moving machinery, or overhead materials that may fall and contact the user or fall arrest system. Avoid working where your lifeline may cross or tangle with that of another worker. Avoid working where an object may fall and strike the lifeline; resulting in loss of balance or damage to the lifeline. Do not allow the lifeline to pass under arms or between legs.
- **Sharp Edges:** Avoid working where the lifeline will be in contact with or abrade against unprotected sharp edges. Where contact with a sharp edge is unavoidable, cover the edge with a protective material.

---

1 ***Capacity:*** *130 lbs -310 lbs (59 kg- 141 kg) is the capacity range required by standard CSA Z259.2.2 Type 2. Some DBI-SALA SRLs are tested to a 420 lbs (191 kg) capacity. See Figure 1 for the SRL models covered by this instruction and their capacities.*

Figure 3 – Fall Clearance and Swing Fall

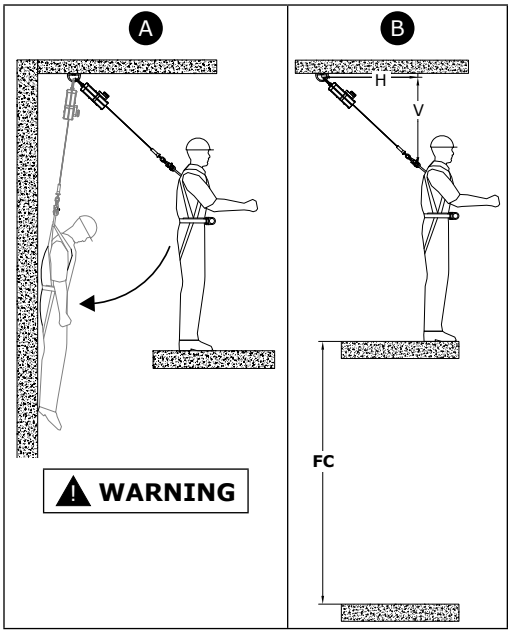

FC = Minimum Fall Clearance

FC ft (m)		H - Horizontal Distance from Anchorage Point										
		0 (0.0)	2 (0.6)	4 (1.2)	6 (1.8)	8 (2.4)	10 (3.0)	12 (3.7)	14 (4.3)	16 (4.9)	18 (5.5)	20 (6.1)
V - Vertical Distance from Anchorage Point	0 (0.0)	6 (2)	8 (2.6)	×	×	×	×	×	×	×	×	×
	10 (3)	6 (2)	6.2 (2.1)	6.8 (2.3)	7.7 (2.6)	8.8 (2.9)	×	×	×	×	×	×
	20 (6.1)	6 (2)	6.1 (2)	6.4 (2.1)	6.9 (2.3)	7.5 (2.5)	8.4 (2.7)	9.3 (3)	×	×	×	×
	30 (9.1)	6 (2)	6.1 (2.1)	6.3 (2.1)	6.6 (2.2)	7 (2.3)	7.6 (2.5)	8.3 (2.7)	9.1 (3)	×	×	×
	40 (12.2)	6 (2)	6 (2)	6.2 (2.1)	6.4 (2.1)	6.8 (2.2)	7.2 (2.4)	7.8 (2.5)	8.4 (2.7)	9.1 (2.9)	9.9 (3.2)	×
	50 (15.2)	6 (2)	6 (2)	6.2 (2.1)	6.4 (2.2)	6.6 (2.2)	7 (2.3)	7.4 (2.5)	7.9 (2.6)	8.5 (2.8)	9.1 (3)	9.9 (3.2)
	60 (18.3)	6 (2)	6 (2)	6.1 (2)	6.3 (2.1)	6.5 (2.1)	6.8 (2.2)	7.2 (2.4)	7.6 (2.5)	8.1 (2.6)	8.6 (2.8)	9.2 (3)
	70 (21.3)	6 (2)	6 (2)	6.1 (2.1)	6.3 (2.1)	6.5 (2.2)	6.7 (2.2)	7 (2.3)	7.4 (2.5)	7.8 (2.6)	8.3 (2.7)	8.8 (2.9)
	80 (24.4)	6 (2)	6 (2)	6.1 (2)	6.2 (2)	6.4 (2.1)	6.6 (2.2)	6.9 (2.3)	7.2 (2.3)	7.6 (2.5)	8 (2.6)	8.5 (2.7)
	90 (27.4)	6 (2)	6 (2)	6.1 (2.1)	6.2 (2.1)	6.4 (2.2)	6.6 (2.2)	6.8 (2.3)	7.1 (2.4)	7.4 (2.5)	7.8 (2.6)	8.2 (2.7)
	100 (30.5)	6 (2)	6 (2)	6.1 (2)	6.2 (2)	6.3 (2.1)	6.5 (2.1)	6.7 (2.2)	7 (2.3)	7.3 (2.4)	7.6 (2.5)	8 (2.6)
	110 (33.5)	6 (2)	6 (2)	6.1 (2.1)	6.2 (2.1)	6.3 (2.1)	6.5 (2.2)	6.7 (2.2)	6.9 (2.3)	7.2 (2.4)	7.5 (2.5)	7.8 (2.6)
	120 (36.6)	6 (2)	6 (2)	6.1 (2)	6.1 (2)	6.3 (2.1)	6.4 (2.1)	6.6 (2.2)	6.8 (2.2)	7.1 (2.3)	7.3 (2.4)	7.7 (2.5)
	130 (39.6)	6 (2)	6 (2)	6.1 (2.1)	6.1 (2.1)	6.2 (2.1)	6.4 (2.1)	6.6 (2.2)	6.8 (2.3)	7 (2.3)	7.2 (2.4)	7.5 (2.5)
	140 (42.7)	6 (2)	6 (2)	6.1 (2)	6.1 (2)	6.2 (2)	6.4 (2.1)	6.5 (2.1)	6.7 (2.2)	6.9 (2.2)	7.2 (2.3)	7.4 (2.4)
	150 (45.7)	6 (2)	6 (2)	6.1 (2.1)	6.1 (2.1)	6.2 (2.1)	6.3 (2.1)	6.5 (2.2)	6.7 (2.2)	6.9 (2.3)	7.1 (2.4)	7.3 (2.4)
	160 (48.8)	6 (2)	6 (2)	6 (2)	6.1 (2)	6.2 (2)	6.3 (2.1)	6.4 (2.1)	6.6 (2.2)	6.8 (2.2)	7 (2.3)	7.2 (2.3)
	170 (51.8)	6 (2)	6 (2)	6 (2)	6.1 (2)	6.2 (2.1)	6.3 (2.1)	6.4 (2.1)	6.6 (2.2)	6.8 (2.3)	7 (2.3)	7.2 (2.4)
	180 (54.9)	6 (2)	6 (2)	6 (2)	6.1 (2)	6.2 (2)	6.3 (2.1)	6.4 (2.1)	6.5 (2.1)	6.7 (2.2)	6.9 (2.2)	7.1 (2.3)
	190 (57.9)	6 (2)	6 (2)	6 (2)	6.1 (2)	6.2 (2.1)	6.3 (2.1)	6.4 (2.1)	6.5 (2.2)	6.7 (2.2)	6.9 (2.3)	7 (2.3)

× *Added Swing Fall Length is not within the recommended work zone.*

NOTE: *Fall Clearance (FC) values in the above table assume a fall from a standing position. If the worker is kneeling or crouching near an edge when a fall occurs, an additional 3 ft (1 m) of Fall Clearance is needed.*

2.0 USE

2.1 RESCUE PLAN: When using this equipment, the employer must have a rescue plan and the means at hand to implement it and communicate that plan to users, authorized persons, and rescuers.

2.2 INSPECTION FREQUENCY: Table 1 indicates inspection frequency. SRLs shall be inspected by the authorized person[1] or rescuer[2] before each use (See Table 2). Results of the Competent Person inspection should be recorded in the *"Inspection and Maintenance Log"* at the back of these instructions or recorded with the i-Safe™ system (see Section 5). CSA Z259.2.2 Type 2 and Type 3 SRLs, must be submitted to a Capital Safety Authorized Service Agent within 2 years of the date of manufacture for inspection and maintenance, and annually thereafter. The Authorized Service Agent will record their findings and label the product with the next annual service date. Results of the Authorized Service or Competent Person inspection should be recorded in the *"Inspection and Maintenance Log"* at the back of these instructions or recorded with the i-Safe™ system (see Section 5).

2.3 NORMAL OPERATIONS: Normal operation will allow the lifeline to extend and retract with no hesitation or slack as the worker moves at normal speeds. If a fall occurs, a speed sensing brake system will activate, stopping the fall and absorbing much of the energy created. Sudden or quick movements should be avoided during normal work operation, as this may cause the SRL to lock up. For falls which occur near the end of the lifeline travel, a reserve lifeline system or Energy Absorber has been incorporated to reduce the fall arrest forces. If the SRL has been subjected to fall arrest forces: remove it from service, mark or tag as "UNUSABLE", inspect and service as instructed in Sections 5 and 6.

1 ***Authorized Person:*** *A person assigned by the employer to perform duties at a location where the person will be exposed to a fall hazard.*
2 ***Rescuer:*** *Person or persons other than the rescue subject acting to perform an assisted rescue by operation of a rescue system.*

Table 1 – Inspection Schedule		
Inspection Frequency:	**Procedure:**	**Inspected By:**
Before Each Use	Inspect per *Table 2 - Inspection Checklist*.	Authorized Person or Rescuer
Within 2 years of the Date of Manufacture and Annually Thereafter	Submit to Capital Safety or an Authorized Service Agent for inspection and maintenance.	Capital Safety Authorized Service Agent
After Replacement of the FAST-Line™ Lifeline[1]	Inspect per *Table 2 - Inspection Checklist.*	Competent Person

2.4 BODY SUPPORT: A Full Body Harness must be used with the Self-Retracting Lanyard. The harness connection point must be above the user's center of gravity. A body belt is not authorized for use with the Self-Retracting Lanyard. If a fall occurs when using a body belt it may cause unintentional release or physical trauma from improper body support.

2.5 COMPATIBILITY OF COMPONENTS: Unless otherwise noted, Capital Safety equipment is designed for use with Capital Safety approved components and subsystems only. Substitutions or replacements made with non approved components or subsystems may jeopardize compatibility of equipment and may affect safety and reliability of the complete system.

> ***IMPORTANT:*** *Follow manufacturer's instructions for components and subsystems in your personal fall arrest system.*

2.6 COMPATIBILITY OF CONNECTORS: Connectors are considered to be compatible with connecting elements when they have been designed to work together in such a way that their sizes and shapes do not cause their gate mechanisms to inadvertently open regardless of how they become oriented. Contact Capital Safety if you have any questions about compatibility. Connectors (hooks, carabiners, and D-rings) must be capable of supporting at least 5,000 lbs. (22.2 kN). Connectors must be compatible with the anchorage or other system components. Do not use equipment that is not compatible. Non-compatible connectors may unintentionally disengage (see Figure 4). Connectors must be compatible in size, shape, and strength. Self-locking snap hooks and carabiners are required.

2.7 MAKING CONNECTIONS: Snap hooks and carabiners used with this equipment must be self-locking. Ensure all connections are compatible in size, shape and strength. Do not use equipment that is not compatible. Ensure all connectors are fully closed and locked. Capital Safety connectors (snap hooks and carabiners) are designed to be used only as specified in each product's user's instructions. See Figure 5 for examples of inappropriate connections. Do not connect snap hooks and carabiners:

A. To a D-ring to which another connector is attached.

B. In a manner that would result in a load on the gate.

> ***NOTE:*** *Large throat snap hooks should not be connected to standard size D-rings or similar objects which will result in a load on the gate if the hook or D-ring twists or rotates, unless the snap hook is equipped with a 3,600 lb (16 kN) gate. Check the marking on your snap hook to verify that it is appropriate for your application.*

C. In a false engagement, where features that protrude from the snap hook or carabiner catch on the anchor, and without visual confirmation seems to be fully engaged to the anchor point.

D. To each other.

E. Directly to webbing or rope lanyard or tie-back (unless the manufacturer's instructions for both the lanyard and connector specifically allows such a connection).

F. To any object which is shaped or dimensioned such that the snap hook or carabiner will not close and lock, or that roll-out could occur.

G. In a manner that does not allow the connector to align properly while under load.

Figure 4 – Unintentional Disengagement

If the connecting element to which a snap hook (shown) or carabiner attaches is undersized or irregular in shape, a situation could occur where the connecting element applies a force to the gate of the snap hook or carabiner. This force may cause the gate (of either a self-locking or a non-locking snap hook) to open, allowing the snap hook or carabiner to disengage from the connecting point.

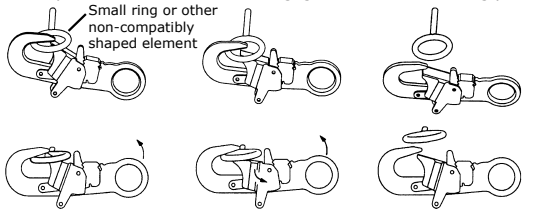

Figure 5 – Inappropriate Connections

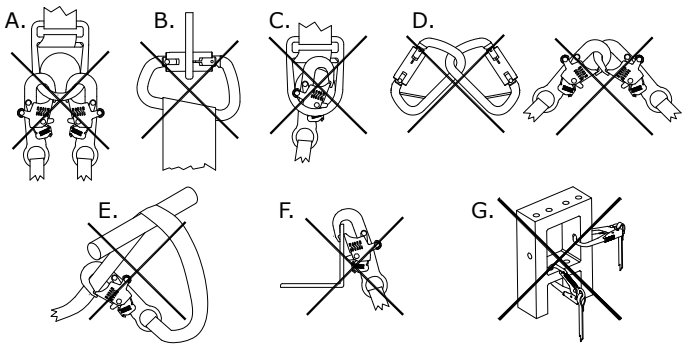

1 ***FAST-Line:*** *FAST-Line™ Replaceable Lifelines are available only on select Sealed-Blok™ SRL models.*

3.0 INSTALLATION

3.1 PLANNING: Plan your fall protection system before starting your work. Account for all factors that may affect your safety before, during, and after a fall. Consider all requirements and limitations defined in this manual.

3.2 ANCHORAGE: Figure 6 illustrates typical SRL anchorage connections. The anchorage should be directly overhead to minimize Free Fall and Swing Fall hazards (see Section 2). Select a rigid anchorage point capable of sustaining the static loads defined in Section 2.2.

3.3 HARNESS CONNECTION: A Full Body Harness is required for Fall Arrest applications. Connect the Snap Hook on the SRL Lifeline to the Back Dorsal D-Ring on the Full Body Harness. (see Figure 7). For situations such as ladder climbing, it may be useful to connect to the front Sternal D-Ring. Consult the harness manufacturer's instructions for details regarding use of the harness connection points.

3.4 TRIPOD MOUNTING: Figure 8 illustrates installation of the Ultra-Lok Self-Retracting Lanyard with Retrieval Hand-Crank on a DBI-SALA Tripod. The SRL-R is mounted on a leg of the Tripod and the Lifeline is routed through a Pulley System on the Head of the Tripod:

1. **Secure the Quick Mount Bracket on the leg of the Tripod:** Assemble the Quick Mount Bracket around the Upper Tube of the Tripod Leg. Position as desired and then tighten the mounting bolts to 15 ft-lbs (20 Nm). Do not overtighten the bolts.

   IMPORTANT: *Never mount the Quick Mount Bracket on the Lower (Telescoping) Tube of the Tripod Leg.*

2. **Secure the SRL Mounting Bracket on the Quick Mount Bracket:** Position the notches in the SRL Mounting Bracket over the Rod Ends protruding from the Quick Mount Bracket and then pivot the SRL toward the Tripod Leg until the holes in the SRL Mounting Bracket align with the holes in the Quick Mount Bracket. Insert the Mounting Pin through the holes in the SRL Mounting Bracket and Quick Mount Bracket.

3. **Route the SRL Lifeline over the Tripod Head Mount Pulleys:** Remove the two Retainer Pins from the Head Mount. Position the SRL Lifeline cable in the grooves in the two Head Mount Pulleys. Reinsert the Retainer Pins through the Head Mount.

Figure 6 – Anchorage Connections	Figure 7 – SRL Connections
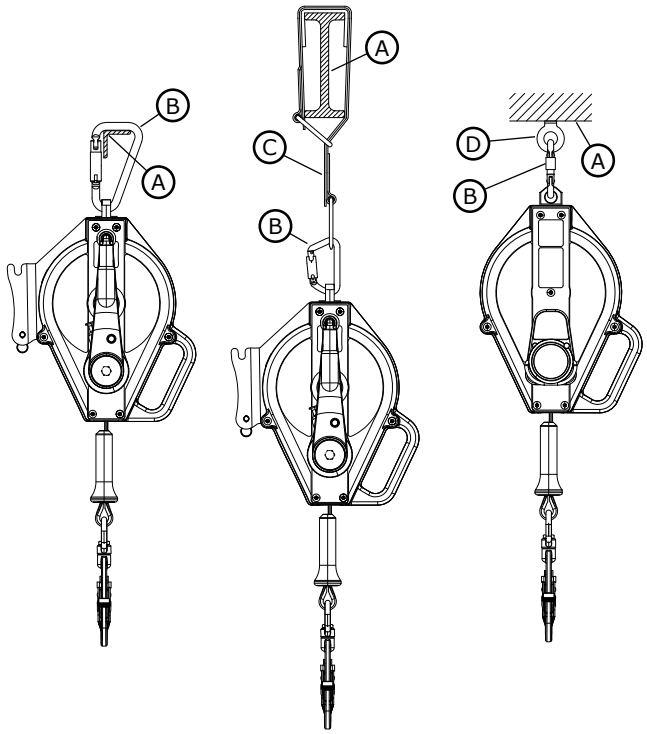	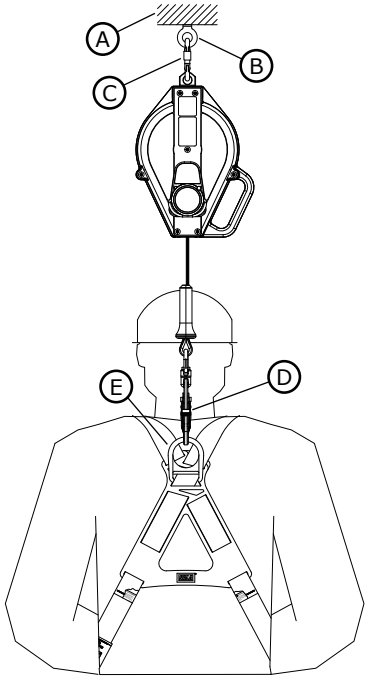
A - Anchorage **B** - Connector **C** - Tie-Off Adapter **D** - Anchorage Connector	**A** - Anchorage **B** - Anchorage Connector **C** - Connector (Carabiner) **D** - Snap Hook **E** - Dorsal D-Ring

Figure 8 – Tripod Mounting

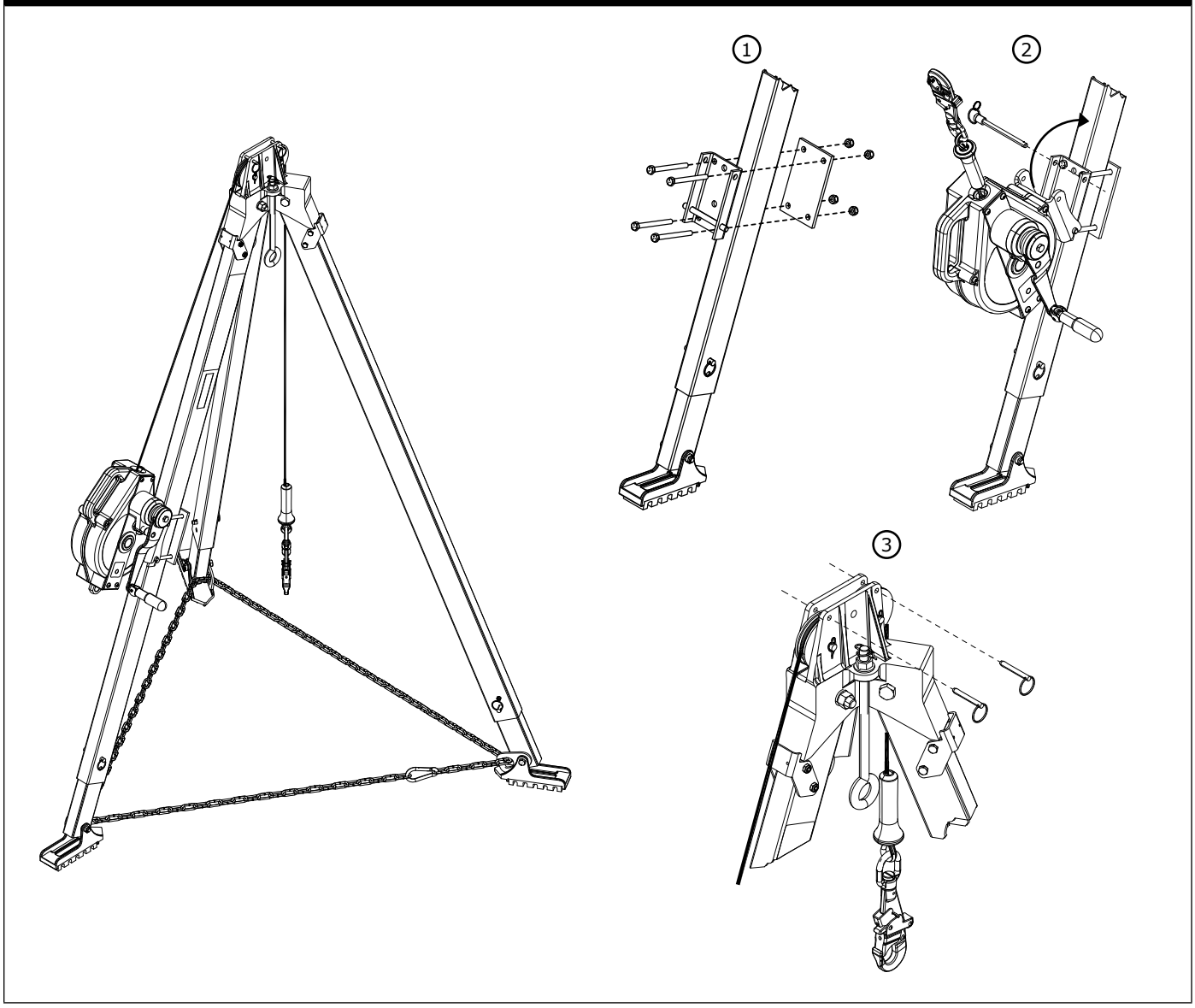

4.0 OPERATION

WARNING: *Do not alter or intentionally misuse this equipment. Consult Capital Safety when using this equipment in combination with components or subsystems other than those described in this manual. Some subsystem and component combinations may interfere with the operation of this equipment. Use caution when using this equipment around moving machinery, electrical hazards, chemical hazards, sharp edges, or overhead materials that may fall onto the lifeline. Do not loop the lifeline around small structural members. Failure to heed this warning may result in equipment malfunction, serious injury, or death.*

WARNING: *Consult your doctor if there is reason to doubt your fitness to safely absorb the shock from a fall arrest. Age and fitness seriously affect a worker's ability to withstand falls. Pregnant women or minors must not use DBI-SALA Self-Retracting Lanyards.*

4.1 BEFORE EACH USE: Before each use of this fall protection equipment carefully inspect it to assure it is in good working condition. Check for worn or damaged parts. Ensure all bolts are present and secure. Check that the lifeline is retracting properly by pulling out the line and allowing it to slowly retract. If there is any hesitation in retraction the unit should be marked as "UNUSABLE" and returned to an authorized service center for service. Inspect the lifeline for cuts, frays, burns, crushing and corrosion. Check locking action by pulling sharply on the line. See Section 5 for inspection details. Do not use if inspection reveals an unsafe condition.

4.2 AFTER A FALL: Any equipment which has been subjected to the forces of arresting a fall or exhibits damage consistent with the effect of fall arrest forces as described in Section 5, must be removed from service immediately, marked as "UNUSABLE", and inspected and serviced as instructed in Sections 5 and 6.

4.3 BODY SUPPORT: A full body harness must be worn when using DBI-SALA SRLs. For general fall protection use, connect to the back Dorsal D-Ring. For situations such as ladder climbing, it may be useful to connect to the front Sternal D-Ring. Consult the harness manufacturer's instructions for details regarding use of the harness connection points.

> ***IMPORTANT:*** *Do not use a body belt for free fall applications. See OSHA 1926.502 for guidelines.*

4.4 MAKING CONNECTIONS: When using a hook to make a connection, ensure roll-out cannot occur (see Figure 5). Do not use hooks or connectors that will not completely close over the attachment object. Do not use non-locking snap hooks. The mounting surface should meet the anchorage strength requirements stated in section 2.2. Follow the manufacturer's instructions supplied with each system component.

4.5 OPERATION: Inspect the SRL as described in section 5.0. Connect the SRL to a suitable anchorage or anchorage connector as previously described. Connect the Self-Locking Snap Hook on the end of the lifeline to the Dorsal D-Ring on the Full Body Harness (see Figure 7). Ensure connections are compatible in size, shape, and strength. Ensure hook is fully closed and locked. Once attached, the worker is free to move about within the recommended working area at normal speeds. If the RSQ Selection Knob is set to 'Fall Arrest', the SRL will arrest the fall. If the RSQ Selection Knob is set to 'Descent', the SRL will automatically descend the user to a lower level when a fall occurs. When working with an SRL, always allow the lifeline to recoil back into the device under control. A tag line may be required to extend or retract the lifeline during connection and disconnection operations. A tag line can be used to prevent uncontrolled retraction of the lifeline into the SRL. Depending on the work site environment and conditions, it may be necessary to restrain the free end of the tag line to prevent interference and entanglement with equipment or machinery.

> ***WARNING:*** *Do not tie or knot lifeline. Avoid lifeline contact with sharp or abrasive surfaces. Inspect lifeline frequently for cuts, fraying, burns, or signs of chemical damage. Dirt, contaminants, and water can lower dielectric properties of the lifeline. Use caution near power lines.*

4.6 RSQ™ FALL ARREST/DESCENT MODE SELECTION: Ultra-Lok™ RSQ™ Dual-Mode SRLs are equipped with an RSQ Knob to select between the Fall Arrest or Descent operating modes of the SRL (see Figure 9). To select Fall Arrest Mode or Descent Mode:

1. Pull the RSQ™ Engagement Knob outward.
2. Turn the RSQ™ Engagement Knob until the arrow on the face of the knob points to the Selection Notch for the desired mode and the RSQ™ Engagement Knob clicks into place with the Selection Notch (as illustrated in Figure 9).

> ***IMPORTANT:*** *Ultra-Lok RSQ SRLs are designed for emergency fall arrest and descent and may only be used for a single, vertical descent. If the SRL is used to descend, remove it from service immediately and send it to an authorized service center for repair.*

Figure 9 – RSQ Fall Arrest/Descent Mode Selection

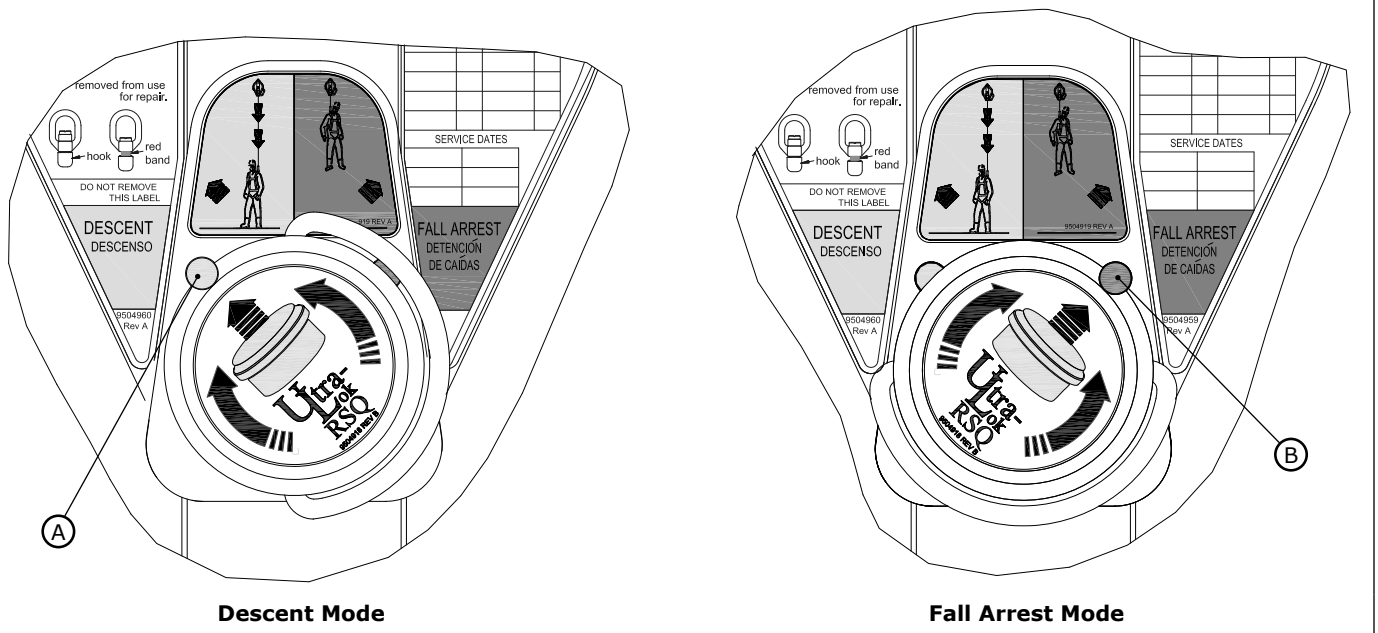

Descent Mode **Fall Arrest Mode**

A - Descent Selection Notch **B** - Fall Arrest Selection Notch

RSQ Descent Mode: In Descent Mode, the user automatically descends to a lower level when a fall occurs.

RSQ Fall Arrest Mode: In Fall Arrest Mode, the SRL arrests the fall and the user remains suspended. Descent is activated and controlled with the RSQ™ Engagement Knob Pull Ring or an optional Extension Pole Release Tool (see Figure 10):

- **Engagement Knob Pull Ring:** Figure 10 illustrates operation of the Engagement Knob Pull Ring. To disengage Fall Arrest Mode and initiate descent, grasp the Pull Ring and pull the Engagement Knob straight out. To stop descent; release the Pull Ring to re-engage Fall Arrest Mode. To fully engage Descent Mode so descent continues without pulling the Pull Ring, turn the Engagement Knob counter-clockwise until the arrow on face of the knob points to the Descent Selection Notch (see Figure 9).

  NOTE: *80 lbs - 100 lbs (0.36 kN - 0.45 kN) of pulling force is required to release the RSQ™ Engagement Knob from Fall Arrest Mode.*

- **Extension Pole Release Tool:** Insert the Extension Pole Release Tool from any direction so the ends of the Release Forks surround the base of the RSQ™ Engagement Knob below the Knurled Ridge and Pull Ring (see Figure 10). To disengage Fall Arrest Mode and initiate descent, push forward on the Extension Pole until the RSQ™ Engagement Knob is fully lodged in the Release Fork. Descent will continue as long as the Release Fork is fully lodged between the RSQ™ Engagement Knob and the Housing. Removal of Release Fork may cause unit to re-engage Fall Arrest Mode.

  IMPORTANT: *The Release Fork on the Extension Pole Release tool is tapered to push the RSQ™ Engagement Knob straight out as the fork is pushed forward on the knob. It is not necessary to pry the knob with the Extension Pole. Prying could break off the knob.*

Figure 10 – Assisted Rescue Operation

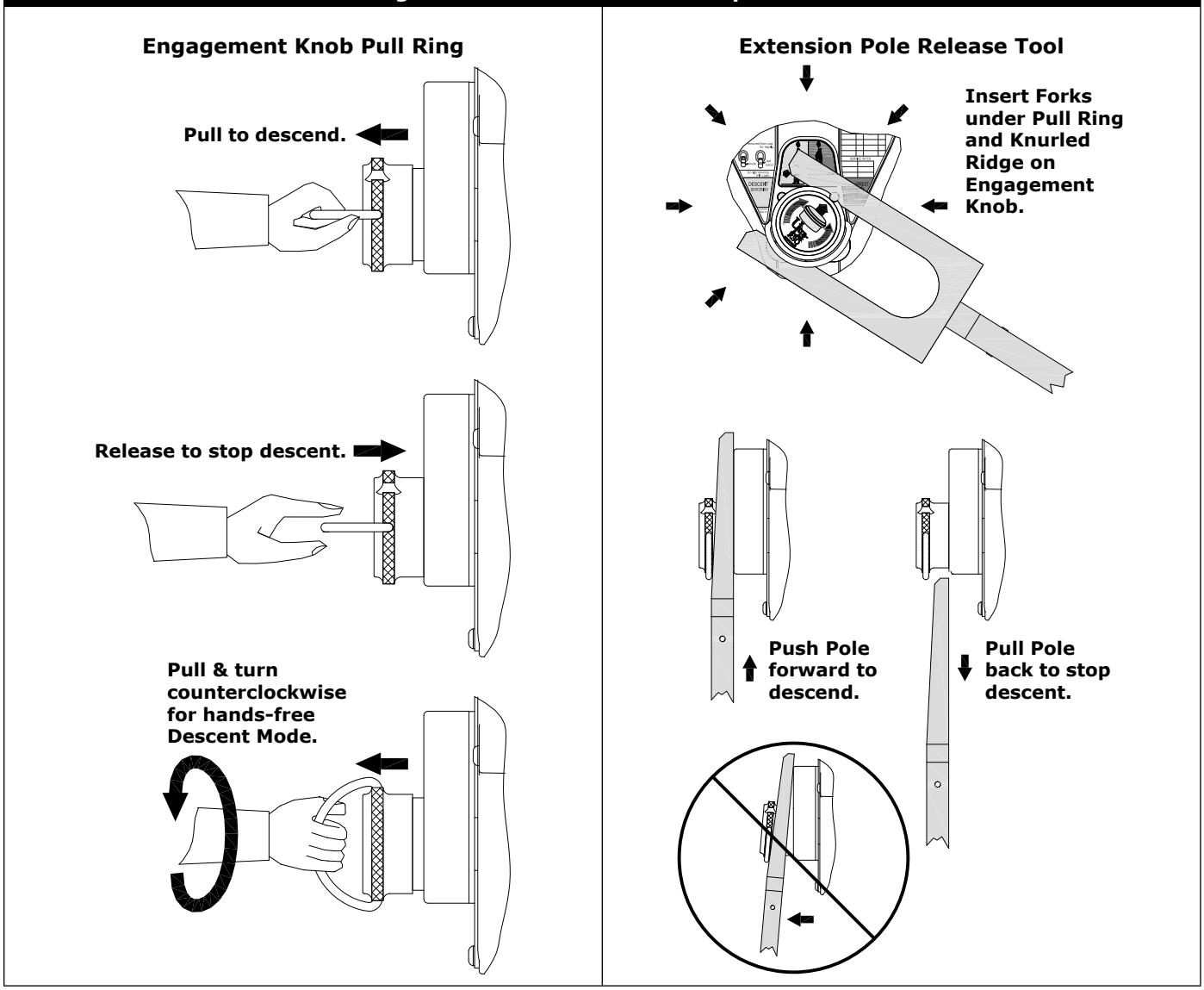

4.7 RETRIEVAL OPERATION: Figure 11 illustrates operation of the Integral Rescue Hand Crank on Ultra-Lok Retrieval SRL-Rs. Do not attempt to operate Retrieval with the lifeline fully retracted. To activate Retrieval mode and use the Rescue Hand Crank:

1. Loosen the Locking Thumb Screw to release the Crank Arm.
2. Rotate the Retrieval Handle up from the SRL Body 90°.
3. Pull and hold the Shift Knob in the unlocked position.
4. Push the Crank Arm in and release the Shift Knob to engage. If needed, rotate the Crank Arm clockwise to help engage the gear.
5. Raise and lower the Lifeline as illustrated in Figure 11
   A. To Raise: Rotate the Crank Arm clockwise.
   B. To Lower: Rotate the Crank Arm counterclockwise. After fall arrest; crank the Crank Arm clockwise slightly first to release the Fall Arrest Brake, then crank the Crank Arm counterclockwise.

Figure 11 – Retrieval Operation

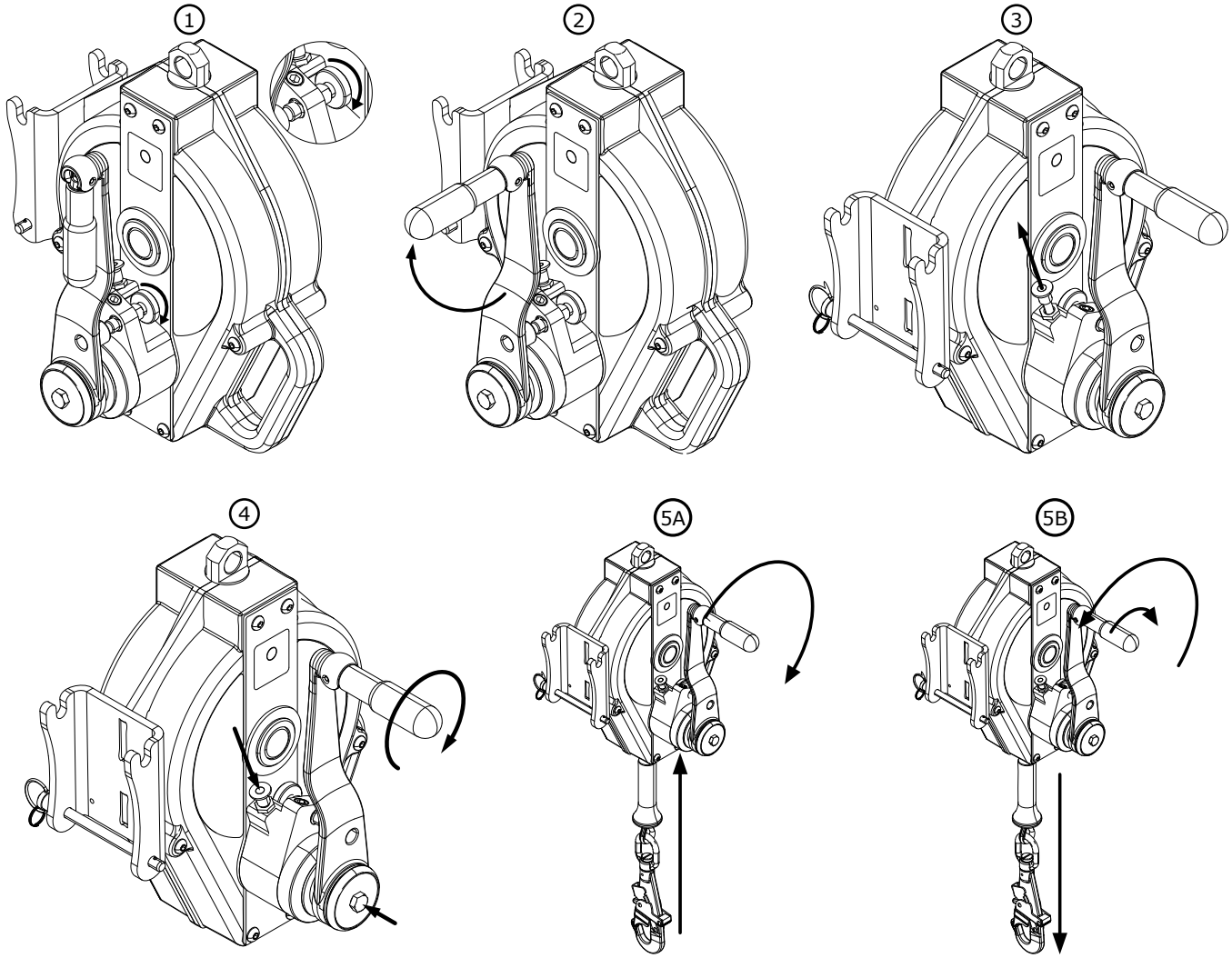

RETRIEVAL OVERLOAD: *Ultra-Lok™ SRL-Rs do not incorporate an Overload Clutch to limit the force exerted on the drive components and attached person. Avoid line slack while in Retrieval mode. Also, monitor the individual during retrieval to ensure they are not subjected to excessive force from continued lifting after entanglement on an obstruction.*

NOTE: *A minimum load of 75 lbs (33.9 kg) is required to lower or pay out the Lifeline. A force of 30 lbs (0.13 kN) is required to operate the Retrieval system when loaded to capacity.*

CAUTION: *Stop cranking when the Lifeline is fully extended or retracted. Continued cranking can damage components.*

4.8 RETRIEVAL DISENGAGEMENT: To disengage Retrieval mode:

> ***CAUTION:*** *When Retrieval mode is disengaged, any extended Lifeline will retract into the SRL. To avoid possible injury, retract the Lifeline prior to disengagement or hold onto the Lifeline.*

1. Remove any load from the Lifeline.
2. Pull and hold the Shift Knob in the unlocked position.
3. Pull the Crank Arm out to disengage and then release the Shift Knob.
4. Pull out and rotate the Retrieval Handle down toward the SRL Body to stowed position.

5.0 INSPECTION

5.1 i-Safe™ RFID TAG: The Self-Retracting Lanyard includes an i-Safe™ Radio Frequency Identification (RFID) tag. The RFID tag can be used in conjunction with the i-Safe handheld reading device and web based portal to simplify inspection and inventory control and provide records for your fall protection equipment. For details, contact a Capital Safety Customer Service representative (see back cover); or if you have already registered, go to *http://isafe3.capitalsafety.com/Pro/*. Follow the instructions provided with your i-Safe handheld reader, or on the web portal, to transfer your data to your web log.

Figure 12 – i-Safe RFID Tag

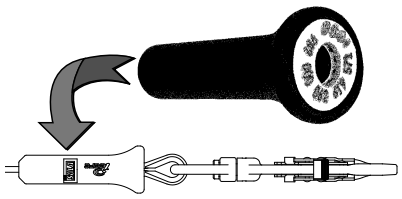

5.2 INSPECTION FREQUENCY: The Ultra-Lok Self-Retracting Lanyard must be inspected at the intervals defined in Section 2.2 - Inspection Frequency". Inspection procedures are described in the "Inspection Checklist" (Table 2).

> ***IMPORTANT:*** *If the Self-Retracting Lanyard has been subjected to fall arrest or impact forces it must be immediately removed from service and sent to an authorized service center for repair.*

> ***IMPORTANT:*** *Extreme working conditions (harsh environments, prolonged use, etc.) may require increasing the frequency of inspections.*

5.3 UNSAFE OR DEFECTIVE CONDITIONS: If inspection reveals an unsafe defective condition, remove the Self-Retracting Lanyard from service immediately, mark as "UNUSABLE", and send to an authorized service center for repair.

> ***NOTE:*** *Only Capital Safety or parties authorized in writing may make repairs to this equipment.*

5.4 PRODUCT LIFE: The functional life of DBI-SALA Self-Retracting Lanyards is determined by work conditions and maintenance. As long as the product passes inspection criteria, it may remain in service.

6.0 MAINTENANCE, SERVICING, AND STORAGE

6.1 CLEANING: Cleaning procedures for the Self-Retracting Lanyard are as follows:

- Periodically clean the exterior of the SRL using water and a mild soap solution. Position the SRL so excess water can drain out. Clean labels as required.
- Clean lifeline with water and mild soap solution. Rinse and thoroughly air dry. Do not force dry with heat. An excessive buildup of dirt, paint, etc. may prevent the lifeline from fully retracting back into the housing causing a potential free fall hazard. Replace lifeline if excessive buildup is present.

6.2 SERVICE: Additional maintenance and servicing procedures must be completed by an authorized service center. Do not attempt to disassemble the SRL or lubricate any parts.

6.3 STORAGE AND TRANSPORT: Store and transport Self-Retracting Lanyard in a cool, dry, clean environment out of direct sunlight. Avoid areas where chemical vapors may exist. Thoroughly inspect the SRL after any period of extended storage.

LABELS

The following labels must be present on the Ultra-Lok SRL. Labels must be replaced if they are not fully legible. Contact Capital Safety for replacement labels.

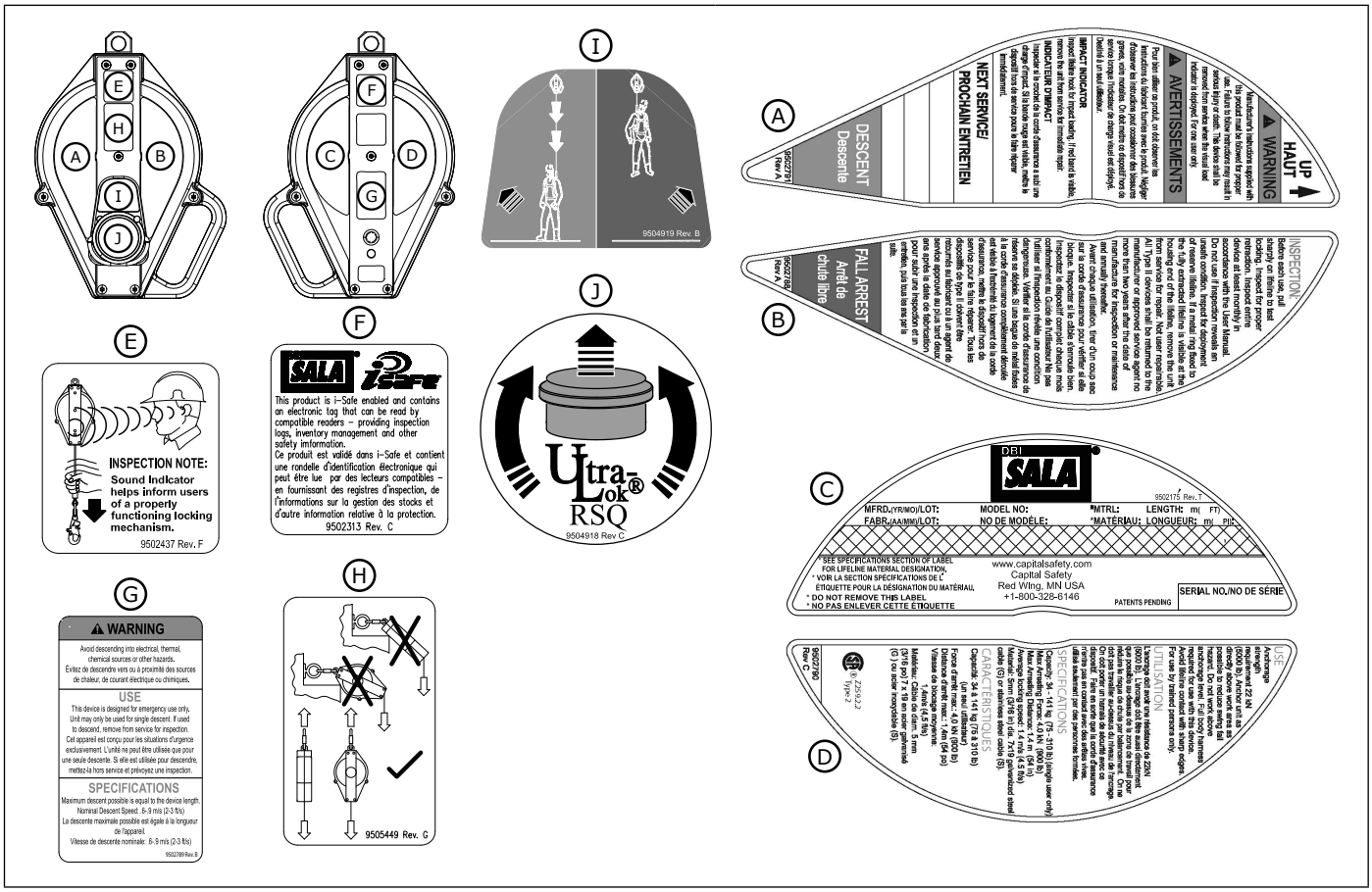

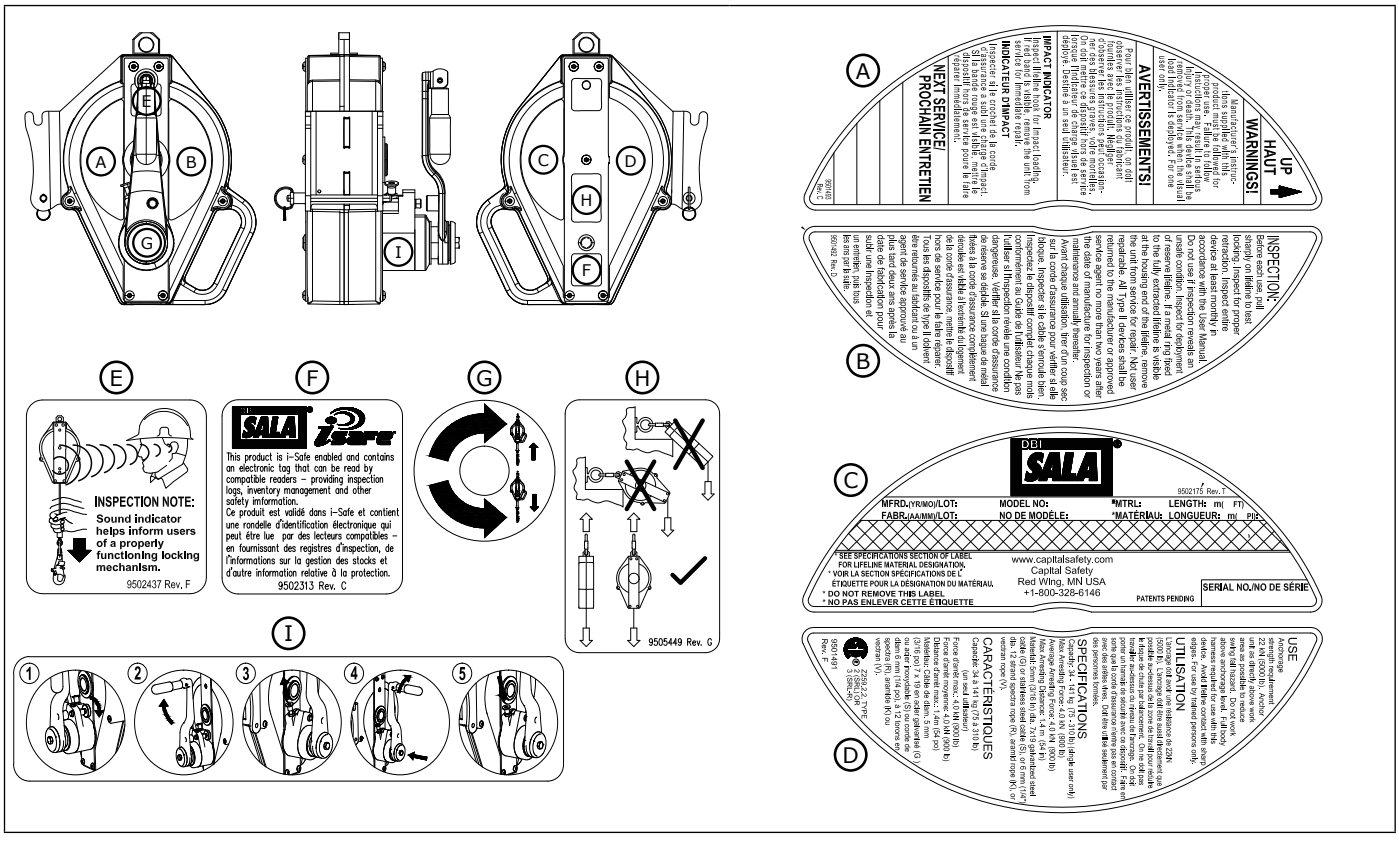

Table 2 – Inspection Checklist

Component:	Inspection:	Before Each Use	Competent Person
SRL (Diagram 1)	Inspect for loose bolts and bent or damaged parts.	☐	☐
	Inspect Housing (A) for distortion, cracks, or other damage.	☐	☐
	Inspect the Swivel Eye (B) for distortion, cracks, or other damage. The Swivel Eye should be attached securely to the SRL, but should pivot freely.	☐	☐
	The Lifeline (C) should pull out and retract fully without hesitation or creating a slack line condition.	☐	☐
	Ensure device locks up when lifeline is jerked sharply. Lockup should be positive with no slipping. NOTE: SRLs with RSQ should be in Fall Arrest Mode for this test (see Figure 8)	☐	☐
	The labels must be present and fully legible (see *"Labels"*).	☐	☐
	Look for signs of corrosion on the entire unit.	☐	☐
Swivel Snap Hook & Impact Indicator (Diagram 2)	Inspect the Swivel Snap Hook for signs of damage, corrosion, and working condition. Swivel should rotate freely. Inspect the Impact Indicator. If the Red Band is displayed (Indicated Mode), impact loading has occurred and the SRL must be removed from service and inspected. Do not attempt to reset the Impact Indicator. Return the SRL to an authorized service center for resetting. NOTE: The Swivel will not turn freely when the Impact Indicator is in Indicated Mode.	☐	☐
Wire Rope Lifeline (Diagram 3)	Inspect wire rope for cuts, kinks, broken wires, bird-caging, welding splatter, corrosion, chemical contact areas, or severely abraded areas. Slide the cable bumper up and inspect ferrules for cracks or damage and inspect the wire rope for corrosion and broken wires. Replace the wire rope assembly if there are six or more randomly distributed broken wires in one lay, or three or more broken wires in one strand in one lay. A "lay" of wire rope is the length of wire rope it takes for a strand (the larger groups of wires) to complete one revolution or twist along the rope. Replace the wire rope assembly if there are any broken wires within 1 inch (25 mm) of the ferrules.	☐	☐
Reserve Lifeline (Diagram 4)	Inspect the reserve lifeline payout. If a fall has been arrested with most of the lifeline out, the reserve lifeline may have been deployed. Pull the lifeline out of the SRL until it stops. If a red band is visible, the reserve lifeline is spent and the unit must be serviced by an authorized service center before reuse.	☐	☐
RSQ Components (Diagram 5)	A hand pull test should be performed on RSQ™ Components prior to each use: 1. Set RSQ Engagement Knob to Descent position (Diagram 4). 2. Grasp the lifeline and pull firmly to engage descent mechanism. 3. Continue to smoothly pull out approximately 3 feet (1 m) of cable. Steady resistance should be felt when pulling out cable.	☐	☐
Retrieval Integral Rescue Hand Crank (Diagram 6)	Inspect the Crank Arm (A) for distortion or other damage. Ensure that the Retrieval Handle (B) can be folded out and secured in the cranking position.	☐	☐
	Ensure the Retrieval Shift Knob (C) can be pulled out to the unlocked position and then released, locking the Crank Arm in both the engaged and disengaged positions.	☐	☐
	Test the retrieval feature for proper operation by raising and lowering a test weight of at least 75 lbs (34 kg). When the Retrieval Handle is released, the weight should not move and the Retrieval Handle should remain in position (no movement). A 'clicking' sound should be audible when raising the load.	☐	☐

Diagram 1 – SRL

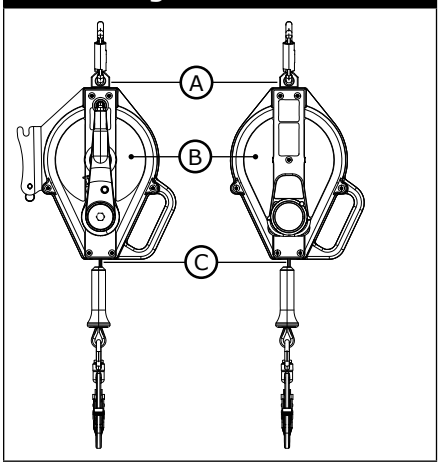

Diagram 2 – Impact Indicator

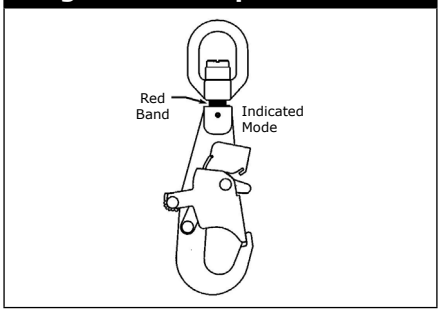

Diagram 3 – Lifeline

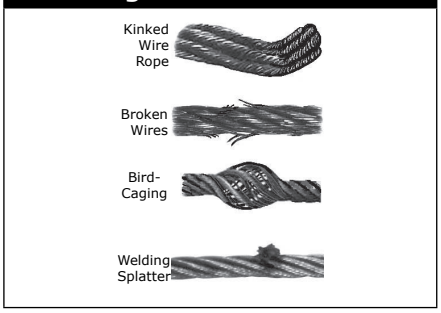

Diagram 4 – Reserve Lifeline

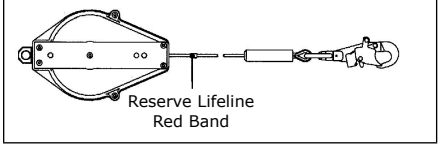

Diagram 5 – RSQ Knob

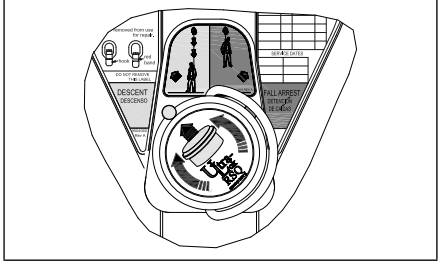

Diagram 6 – Hand Crank

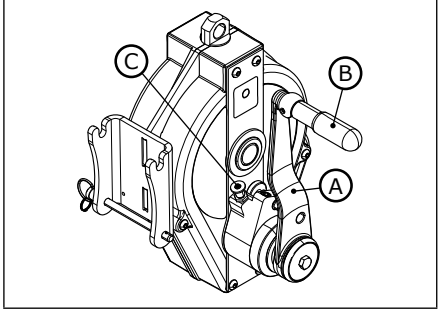

INSPECTION AND MAINTENANCE LOG

SERIAL NUMBER:	
MODEL NUMBER:	
DATE PURCHASED:	**DATE OF FIRST USE:**

INSPECTION DATE	**INSPECTION ITEMS NOTED**	**CORRECTIVE ACTION**	**MAINTENANCE PERFORMED**
Approved By:			
Approved By:			
Approved By:			
Approved By:			
Approved By:			
Approved By:			
Approved By:			
Approved By:			
Approved By:			
Approved By:			
Approved By:			
Approved By:			
Approved By:			
Approved By:			
Approved By:			
Approved By:			
Approved By:			
Approved By:			

INSPECTION AND MAINTENANCE LOG

SERIAL NUMBER:	
MODEL NUMBER:	
DATE PURCHASED:	**DATE OF FIRST USE:**

INSPECTION DATE	INSPECTION ITEMS NOTED	CORRECTIVE ACTION	MAINTENANCE PERFORMED
Approved By:			
Approved By:			
Approved By:			
Approved By:			
Approved By:			
Approved By:			
Approved By:			
Approved By:			
Approved By:			
Approved By:			
Approved By:			
Approved By:			
Approved By:			
Approved By:			
Approved By:			
Approved By:			
Approved By:			
Approved By:			

LIMITED LIFETIME WARRANTY

Warranty to End User: D B Industries, LLC d/b/a Capital Safety USA ("CAPITAL SAFETY") warrants to the original end user ("End User") that its products are free from defects in materials and workmanship under normal use and service. This warranty extends for the lifetime of the product from the date the product is purchased by the End User, in new and unused condition, from a CAPITAL SAFETY authorized distributor. CAPITAL SAFETY'S entire liability to End User and End User's exclusive remedy under this warranty is limited to the repair or replacement in kind of any defective product within its lifetime (as CAPITAL SAFETY in its sole discretion determines and deems appropriate). No oral or written information or advice given by CAPITAL SAFETY, its distributors, directors, officers, agents or employees shall create any different or additional warranties or in any way increase the scope of this warranty. CAPITAL SAFETY will not accept liability for defects that are the result of product abuse, misuse, alteration or modification, or for defects that are due to a failure to install, maintain, or use the product in accordance with the manufacturer's instructions.

CAPITAL SAFETY'S WARRANTY APPLIES ONLY TO THE END USER. THIS WARRANTY IS THE ONLY WARRANTY APPLICABLE TO OUR PRODUCTS AND IS IN LIEU OF ALL OTHER WARRANTIES AND LIABILITIES, EXPRESSED OR IMPLIED. CAPITAL SAFETY EXPRESSLY EXCLUDES AND DISCLAIMS ANY IMPLIED WARRANTIES OF MERCHANTABILITY OR FITNESS FOR A PARTICULAR PURPOSE, AND SHALL NOT BE LIABLE FOR INCIDENTAL, PUNITIVE OR CONSEQUENTIAL DAMAGES OF ANY NATURE, INCLUDING WITHOUT LIMITATION, LOST PROFITS, REVENUES, OR PRODUCTIVITY, OR FOR BODILY INJURY OR DEATH OR LOSS OR DAMAGE TO PROPERTY, UNDER ANY THEORY OF LIABILITY, INCLUDING WITHOUT LIMITATION, CONTRACT, WARRANTY, STRICT LIABILITY, TORT (INCLUDING NEGLIGENCE) OR OTHER LEGAL OR EQUITABLE THEORY.

DBI SALA®

The Ultimate in Fall Protection

CAPITAL SAFETY

USA & Latin America
3833 SALA Way
Red Wing, MN 55066-5005
Toll Free: 800.328.6146
Phone: 651.388.8282
Fax: 651.388.5065
solutions@capitalsafety.com

Canada
260 Export Boulevard
Mississauga, ON L5S 1Y9
Phone: 905.795.9333
Toll-Free: 800.387.7484
Fax: 888.387.7484
info.ca@capitalsafety.com

Northern Europe
5a Merse Road
North Moons, Moat
Reditch, Worcestershire, UK
B98 9HL
Phone: + 44 (0)1527 548 000
Fax: + 44 (0)1527 591 000
csgne@capitalsafety.com

EMEA
(Europe, Middle East, Africa)
Le Broc Center
Z.I. 1ère Avenue
5600 M B.P. 15
06511 Carros Le Broc Cedex
France
Phone: + 33 4 97 10 00 10
Fax: + 33 4 93 08 79 70
information@capitalsafety.com

Australia & New Zealand
95 Derby Street
Silverwater
Sydney NSW 2128
AUSTRALIA
Phone: +(61) 2 8753 7600
Toll-Free : 1 800 245 002 (AUS)
Toll-Free : 0800 212 505 (NZ)
Fax: +(61) 2 8753 7603
sales@capitalsafety.com.au

Asia
Singapore:
16S, Enterprise Road
Singapore 627666
Phone: +65 - 65587758
Fax: +65 - 65587058
inquiry@capitalsafety.com

Shanghai:
Rm 1406, China Venturetech Plaza
819 Nan Jing Xi Rd,
Shanghai 200041, P R China
Phone: +86 21 62539050
Fax: +86 21 62539060

www.capitalsafety.com

ISO 9001 REGISTERED ANSI-RAB QMS ACCREDITED