SINCO®
NETTING SOLUTIONS

SINCO

RACK GUARD

NETWORKS™ INSTALLATION AND SAFETY INSTRUCTIONS

INDEX:

- RACK GUARD INSTALLATION & HARDWARE ..... PAGE 2 - 25
- ADJUST-A-NET™ KITS ..... PAGE 26 - 28

THIS MANUAL MUST BE READ BY THE INSTALLER BEFORE INSTALLATION OF THE EQUIPMENT

© Copyright 2005, SINCO

SAFETY INSTRUCTIONS

WITHIN THESE INSTRUCTIONS YOU WILL FIND VARIOUS WARNINGS, CAUTIONS AND NOTES. EACH HAS ITS OWN MEANING.

● DEFINITIONS ●

WARNING: AN OPERATIONAL PROCEDURE OR SAFETY INSTRUCTION WHICH, IF NOT FOLLOWED, COULD RESULT IN INJURY OR LOSS OF LIFE.

CAUTION: AN OPERATIONAL PROCEDURE OR SAFETY INSTRUCTION WHICH, IF NOT FOLLOWED, COULD RESULT IN SIGNIFICANT DAMAGE TO EQUIPMENT.

NOTE: AN OPERATIONAL OR MAINTENANCE POINT REQUIRING SPECIAL EMPHASIS OR ATTENTION.

WARNING

THESE INSTRUCTIONS CONSTITUTE AN INSTALLATION PROCEDURE THAT MUST BE SUPERVISED. DURING THE INSTALLATION, USE PROPER SAFETY PRECAUTIONS AND PERSONAL PROTECTIVE EQUIPMENT AS DESIGNATED BY YOUR EMPLOYER.

THE ENTIRE RACK GUARD MOUNT SYSTEM MUST BE INSPECTED PERIODICALLY BY A SUPERVISOR TO ENSURE THAT:

- **SNAP HOOKS OR NYLON TIES ARE ATTACHED TO THE BORDER ROPE AND/OR RACK AT A MINIMUM OF EVERY 12 INCHES.**
- **NYLON MESH PANEL IS NOT DAMAGED.**
- **ALL DAMAGED PANELS ARE REPLACED.**
- **THE RACK IS NOT DAMAGED.**

ALL OPENINGS BETWEEN THE RACK GUARD PANELS AND THE RACK MUST BE SMALL ENOUGH TO PREVENT GOODS FROM FALLING THROUGH THE OPENINGS.

CHECK ALL ATTACHING POINTS TO ASSURE THEY ARE PROPERLY POSITIONED AND TIGHTENED AS REQUIRED.

NOTE: BEFORE CUTTING CABLE MAKE SURE YOU LEAVE ENOUGH CABLE TO FORM END LOOPS WITH WIRE ROPE CLIPS (ABOUT 1 FOOT FOR EACH END).

NOTE: MAXIMUM SINGLE CABLE RUNS SHOULD NOT EXCEED 200 FT. WHEN CABLE RUNS ARE GREATER THAN THIS, THEY SHOULD BE BROKEN DOWN INTO SECTIONS LESS THAN 200 FT.

WARNING

DO NOT OVER TIGHTEN THE CABLES TO THE POINT WHERE DAMAGE MAY BE CAUSED TO THE RACK FRAME !

INSTRUCTIONS FOR CORRECT PLACEMENT OF THE TURNBUCKLES

NOTE: TURNBUCKLES ARE ONLY USED ON ***HORIZONTAL*** RUNS OF CABLE.

A CABLE RUNS LESS THAN 30 FT. DO NOT REQUIRE TURNBUCKLES.

B CABLE RUNS OF 30 FT. UP TO 70 FT. REQUIRE ONLY ONE SINGLE TURNBUCKLE AT THE START OF THE RUN.

C CABLE RUNS GREATER THAN 70 FT. UP TO 200 FT. REQUIRE A SINGLE TURNBUCKLE AT THE START AND AT THE TERMINATION OF EACH RUN.

WARNING

BEFORE MODIFYING ANY RACK, THE INSTALLER SHOULD CONTACT THE RACK MANUFACTURER, AN ENGINEER, OR OTHER PERSON QUALIFIED TO DETERMINE IF THE RACK WILL BE ADVERSELY AFFECTED BY THE INSTALLATION !

NOTE: REMEMBER WHEN USING RACK OFFSET CLAMPS, MEASURE OUT FROM THE RACK FACE TO THE APPROPRIATE GUIDE HOLES ON THE OFFSET. RACK OFFSET CLAMPS ATTACHED TO EXTENSIONS WILL NOT LINE UP HOLE FOR HOLE WITH THOSE ATTACHED DIRECTLY TO THE RACK DUE TO THE THICKNESS OF THE EXTENSION.

WARNING

CABLE CLAMPS *MUST* BE INSTALLED CORRECTLY. FAILURE TO MAKE A TERMINATION IN ACCORDANCE WITH THESE INSTRUCTIONS AND FAILURE TO PERIODICALLY INSPECT AND RETIGHTEN TO THE MINIMUM TORQUE WILL CAUSE A REDUCTION IN HOLDING POWER.

- ***U-BOLT SECTION* OF THE CLAMP *MUST* BE INSTALLED ON THE DEAD (SHORT) END OF THE CABLE, AND THE *SADDLE* ON THE LIVE (LONG) END.**
- **REVERSAL OF EVEN ONE CLAMP WILL REDUCE THE HOLDING POWER BY UP TO 40 PERCENT.**
- ***NEVER* USE CLAMPS TO CONNECT TWO STRAIGHT LENGTHS OF CABLE.**

NOTE: FOR MAXIMUM CABLE STRENGTH:

1. WRAP THE DEAD END OF THE CABLE AROUND THE THIMBLE TO GIVE THE MINIMUM LENGTH OF 6 1/2". APPLY THE FIRST CLAMP AT 1 5/8" FROM THE DEAD END OF THE CABLE (AS SHOWN IN THE ILLUSTRATION). TIGHTEN THE NUTS EVENLY TO THE MINIMUM TORQUE OF 25 FT. LBS.
2. APPLY THE NEXT CLAMP AS NEAR THE THIMBLE AS POSSIBLE. TIGHTEN THE NUTS FINGER TIGHT.
3. HOLD THE LIVE END AND PULL THE THIMBLE SO THAT THE CABLE FITS TIGHTLY AROUND THE THIMBLE. TIGHTEN ***ALL*** NUTS EVENLY ON ***ALL*** CLAMPS TO THE MINIMUM TORQUE.
4. AFTER THE CABLE HAS BEEN INSTALLED AND THE NET ATTACHED, RETIGHTEN THE NUTS TO THE MINIMUM TORQUE.
5. CABLE WILL STRETCH AND SHRINK IN DIAMETER WHEN NETS ARE ATTACHED. INSPECT PERIODICALLY AND RETIGHTEN ALL NUTS TO THE MINIMUM TORQUE.

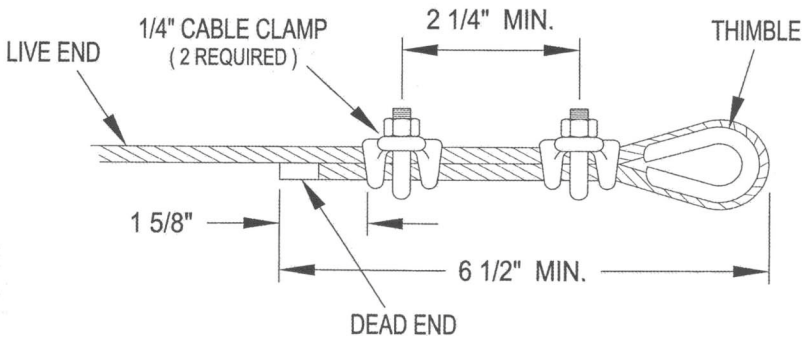

RACK GUARD INSTALLATION AND HARDWARE

WARNING

ALL OPENINGS BETWEEN THE RACK GUARD PANELS AND THE CABLES MUST BE KEPT TO A MINIMUM TO PREVENT GOODS FROM FALLING THROUGH.

STEP 1 READ SAFETY INSTRUCTIONS STARTING ON PAGE 2.

STEP 2 LAY OUT MATERIALS AND GUARD PANELS TO BE USED IN THE INSTALLATION.

STEP 3 READ FOLLOWING INSTALLATION INSTRUCTIONS.

STEP 4 REFER TO PAGE 23 IF YOU HAVE PURCHASED SINCO'S ADJUSTABLE KITS.

HARDWARE:

REFER TO ATTACHED SKETCHES FOR HARDWARE INSTALLATION ACCORDING TO JOB REQUIREMENT.

1. ATTACH EXTENSIONS IF REQUIRED.
2. ATTACH PROPER RACK CLAMPS TO UPRIGHTS WHERE A NET PANEL BEGINS AND ENDS. IN SOME CASES, C BRACKETS CAN BE USED IN LIEU OF INTERMEDIATE RACK CLAMPS.
3. FOR BOTH FLUSH AND OFFSET SYSTEMS, INSERT EYEBOLT INTO RACK CLAMP FOR *HORIZONTAL* CABLE RUNS, AND CONNECT CABLE TO EYEBOLT WITH THIMBLES AND CABLE CLAMPS.
4. FOR OFFSET SYSTEMS, INSERT EYEBOLT INTO RACK CLAMPS FOR *VERTICAL* CABLE RUNS AND CONNECT CABLE TO EYEBOLT WITH THIMBLES AND CABLE CLAMPS.

HANG RACK GUARD PANELS

NOTE:

1. SNAP HOOKS ARE SUPPLIED TO ATTACH NET PANELS TO CABLE.
2. IN A FLUSH MOUNT APPLICATION, NYLON TIES ARE SUPPLIED TO ATTACH NET PANELS TO THE RACK UPRIGHTS.

ATTACH THE BORDER ROPE OF THE NET PANELS AS FOLLOWS:

1. ATTACH THE 4 CORNERS OF THE NET PANEL WITH SNAP HOOKS.
2. CONTINUE ATTACHING THE NET PANEL WITH SNAP HOOKS TO CABLES OR NYLON TIES TO UPRIGHTS AT A MINIMUM OF EVERY 12".
3. FULLY TIGHTEN EACH NYLON TIE.

SINCO

RACK GUARD HARDWARE LEGEND

SYMBOL	ITEM
	UNIV. OFFSET RACK CLAMP
	UNIV. FLUSHMOUNT RACK CLAMP
	3/8" x 4 1/4" EYEBOLTS
	3/8" x 6" TURNBUCKLE - SINGLE
	1/4" CABLE CLAMPS (2 PER CONNECTION)
	1/4" THIMBLES (1 PER CONNECTION)
	UNIV. DIAGONAL BRACES
	1/4" BACKSTAY BRACES
	UNIV. UPRIGHT RACK EXTENSIONS
	1/4" WIRE ROPE SUPPORT CABLES
(NO SYMBOL)	SNAP HOOKS (ONE EVERY 1' ALONG BORDER)
	20" NYLON TIES (1 TIE)
	20" NYLON TIES (2 ADJOINING TIES)

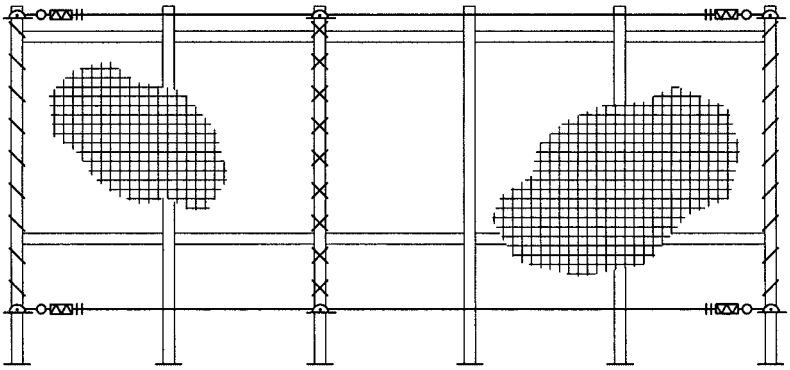

PANEL A PANEL B

TYPICAL FLUSHMOUNT SCENARIO
5 BAYS OF COVERAGE WITH 2 NETTING PANELS

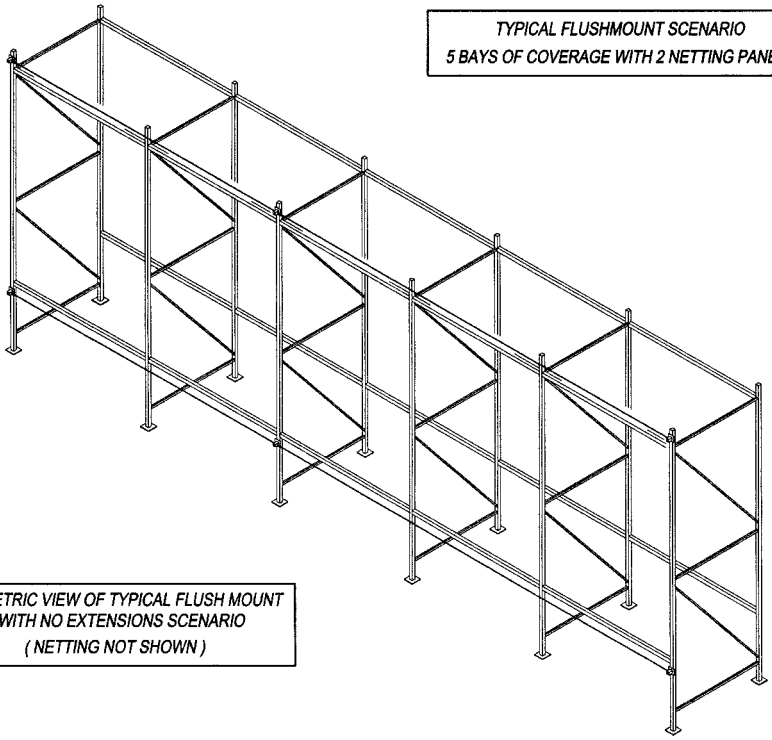

ISOMETRIC VIEW OF TYPICAL FLUSH MOUNT
WITH NO EXTENSIONS SCENARIO
(NETTING NOT SHOWN)

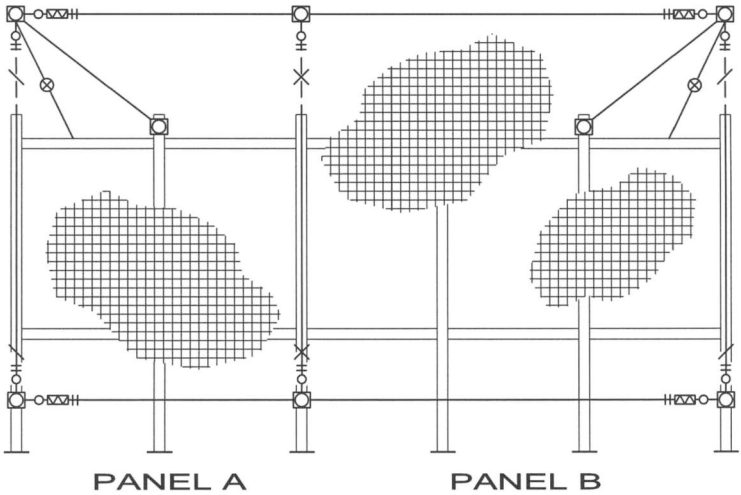

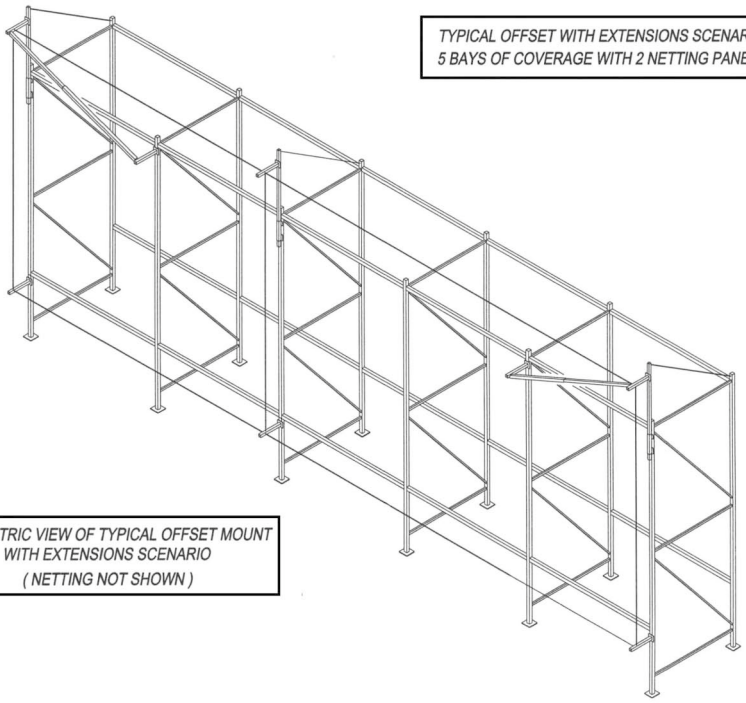

TYPICAL OFFSET WITH EXTENSIONS SCENARIO
5 BAYS OF COVERAGE WITH 2 NETTING PANELS

ISOMETRIC VIEW OF TYPICAL OFFSET MOUNT
WITH EXTENSIONS SCENARIO
(NETTING NOT SHOWN)

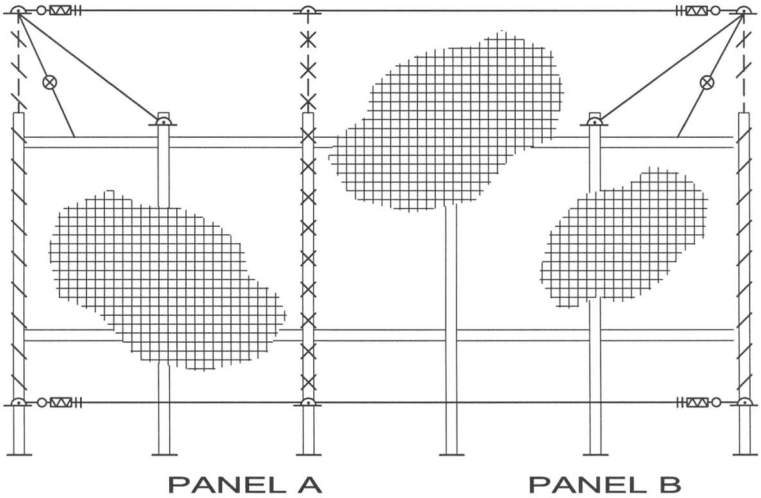

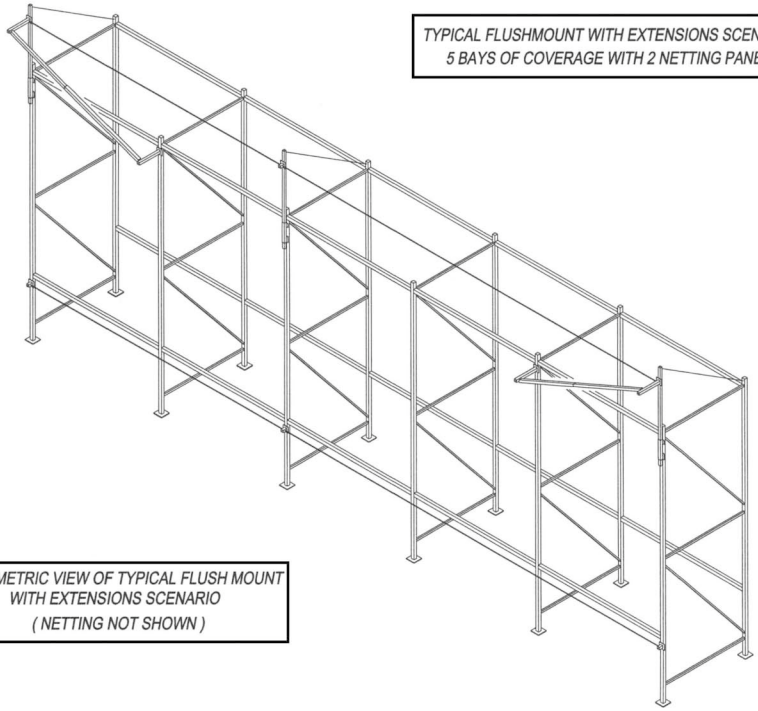

TYPICAL FLUSHMOUNT WITH EXTENSIONS SCENARIO
5 BAYS OF COVERAGE WITH 2 NETTING PANELS

ISOMETRIC VIEW OF TYPICAL FLUSH MOUNT
WITH EXTENSIONS SCENARIO
(NETTING NOT SHOWN)

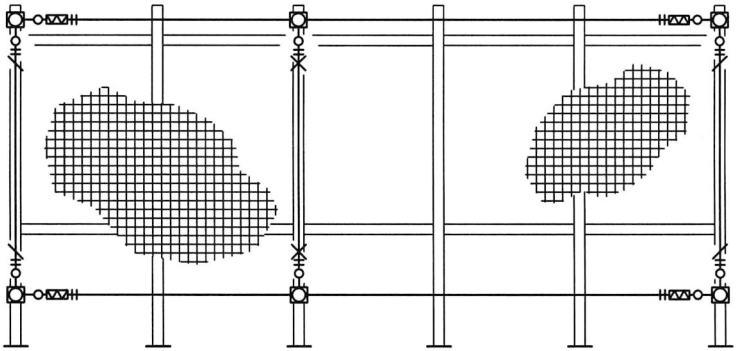

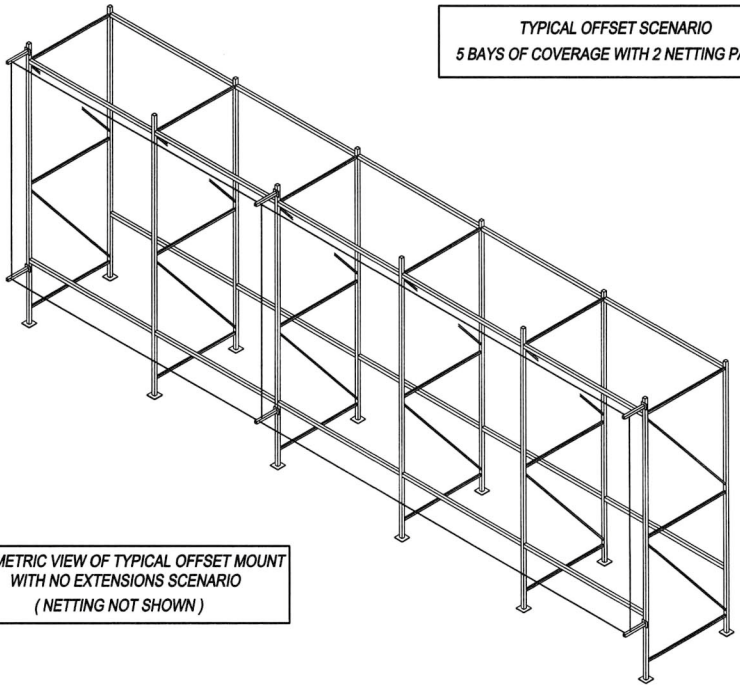

TYPICAL OFFSET SCENARIO
5 BAYS OF COVERAGE WITH 2 NETTING PANELS

ISOMETRIC VIEW OF TYPICAL OFFSET MOUNT
WITH NO EXTENSIONS SCENARIO
(NETTING NOT SHOWN)

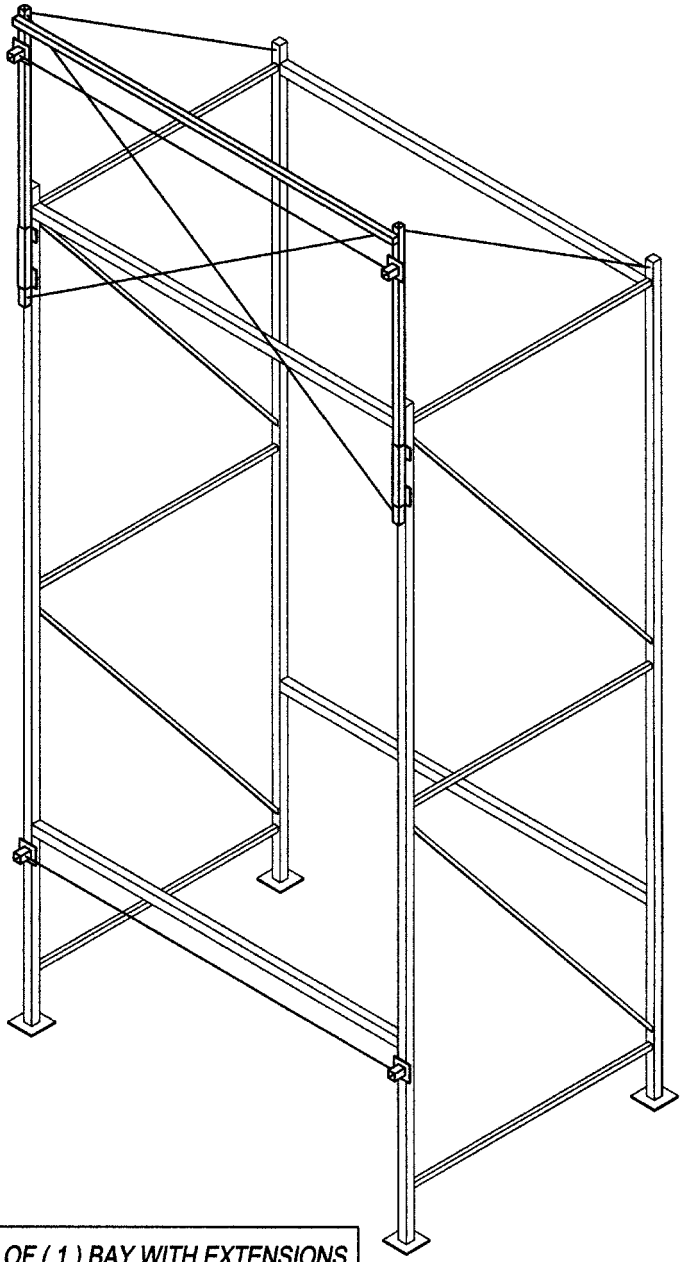

ISOMETRIC VIEW OF (1) BAY WITH EXTENSIONS AND HORIZONTAL INSTALLED DIAGONAL BRACE AND ADDITIONAL BACKSTAY BRACES SCENARIO (NETTING NOT SHOWN)

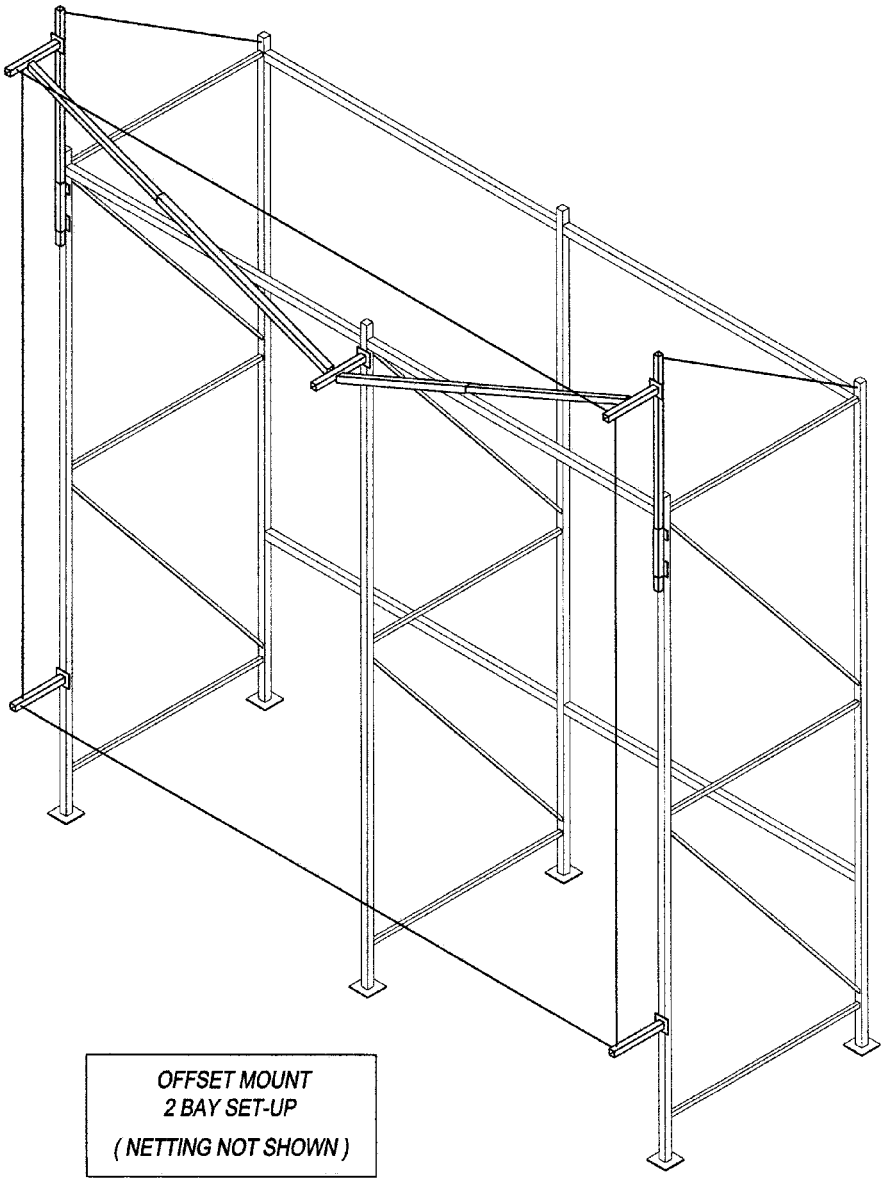

OFFSET MOUNT
2 BAY SET-UP
(NETTING NOT SHOWN)

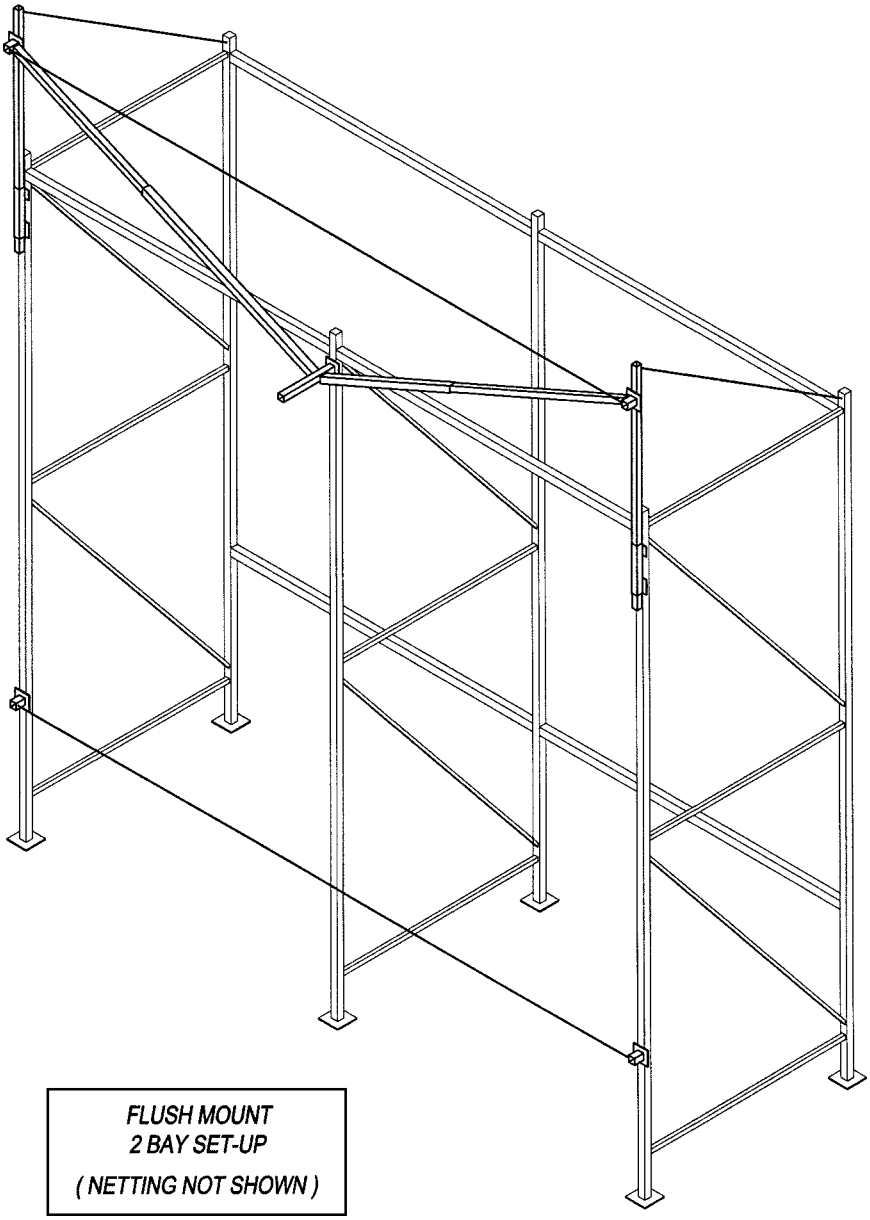

FLUSH MOUNT
2 BAY SET-UP
(NETTING NOT SHOWN)

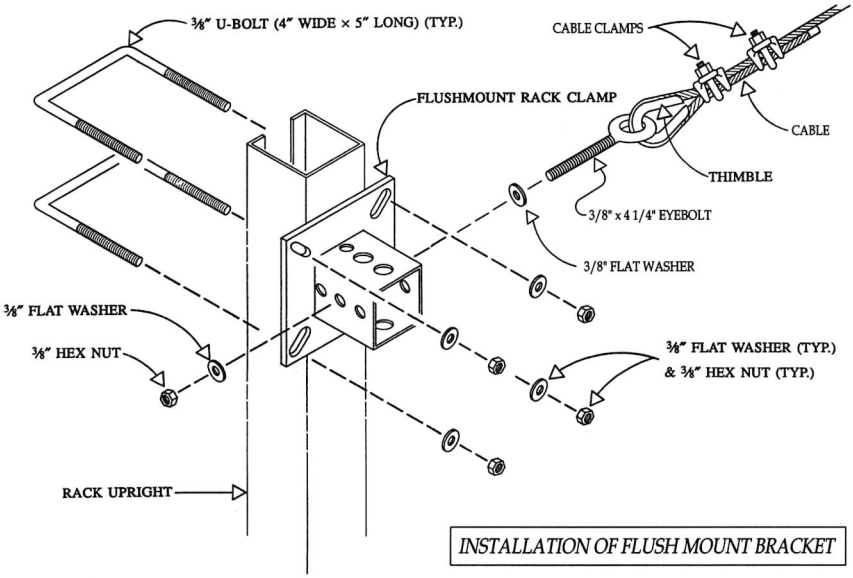

INSTALLATION OF FLUSH MOUNT BRACKET

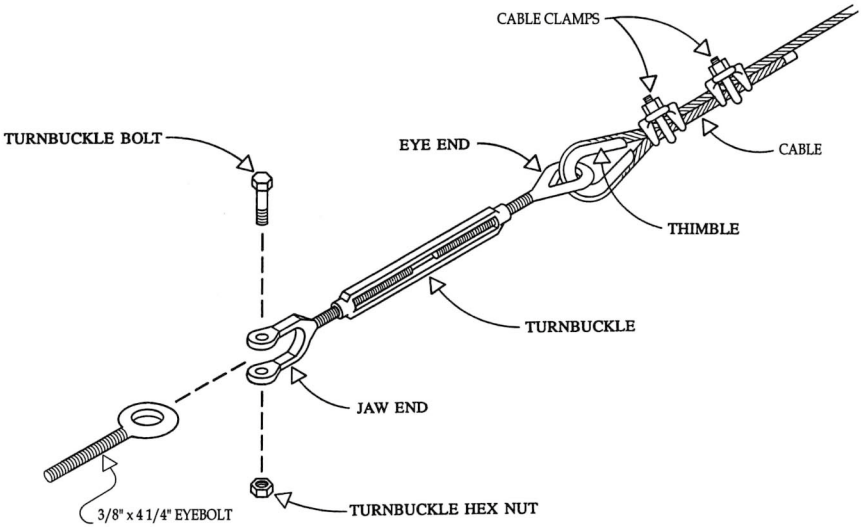

TURNBUCKLE & WIRE ROPE CONNECTION TO EYEBOLT

NOTE: TURNBUCKLES ARE NOT USED ON VERTICAL CABLES

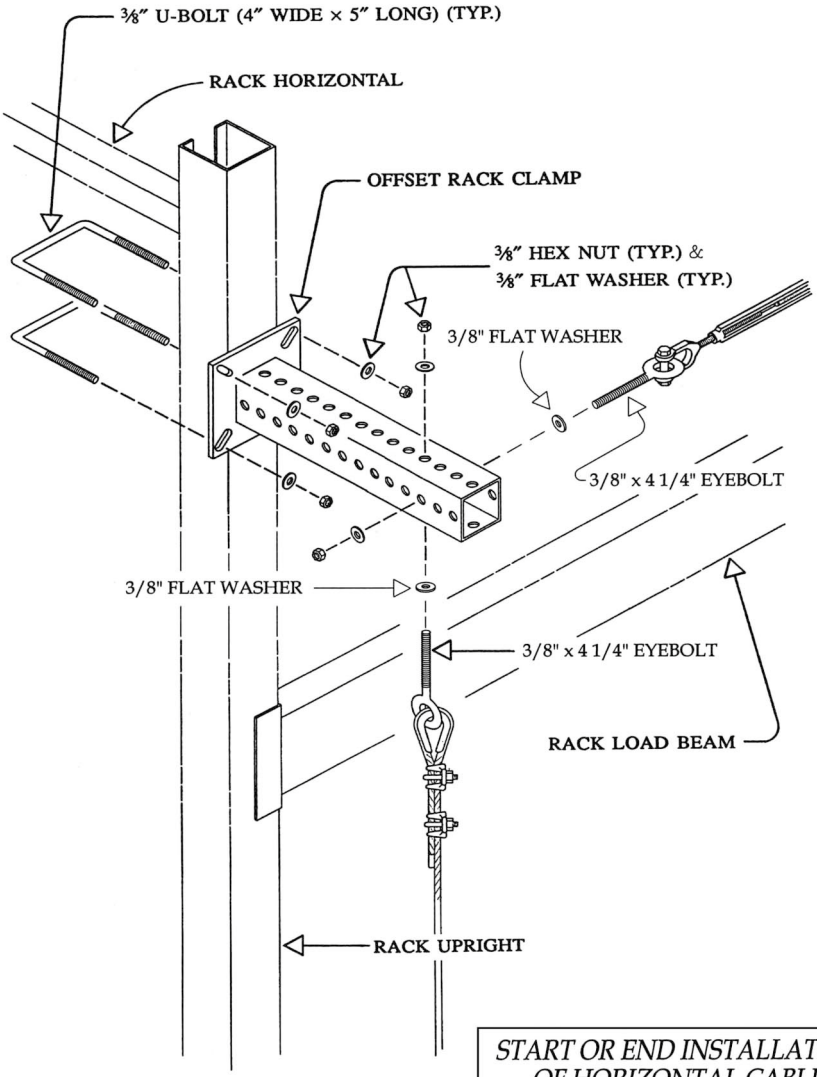

START OR END INSTALLATION OF HORIZONTAL CABLE TO OFFSET BRACKET

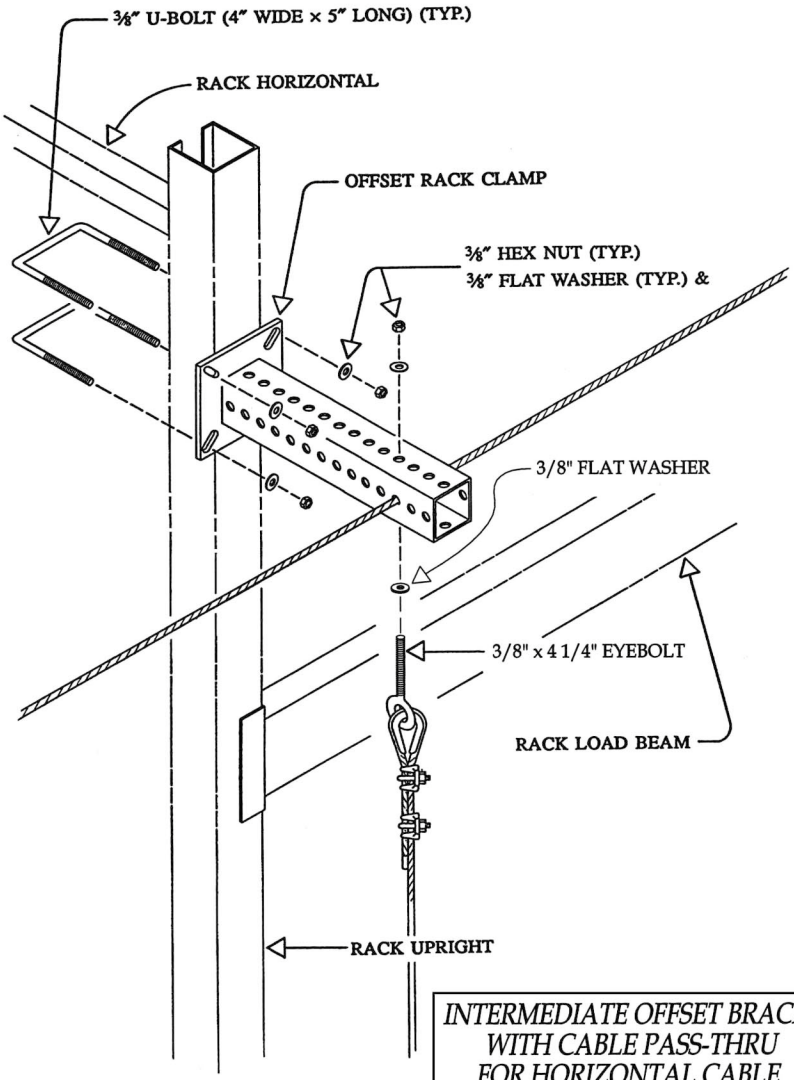

INTERMEDIATE OFFSET BRACKET WITH CABLE PASS-THRU FOR HORIZONTAL CABLE

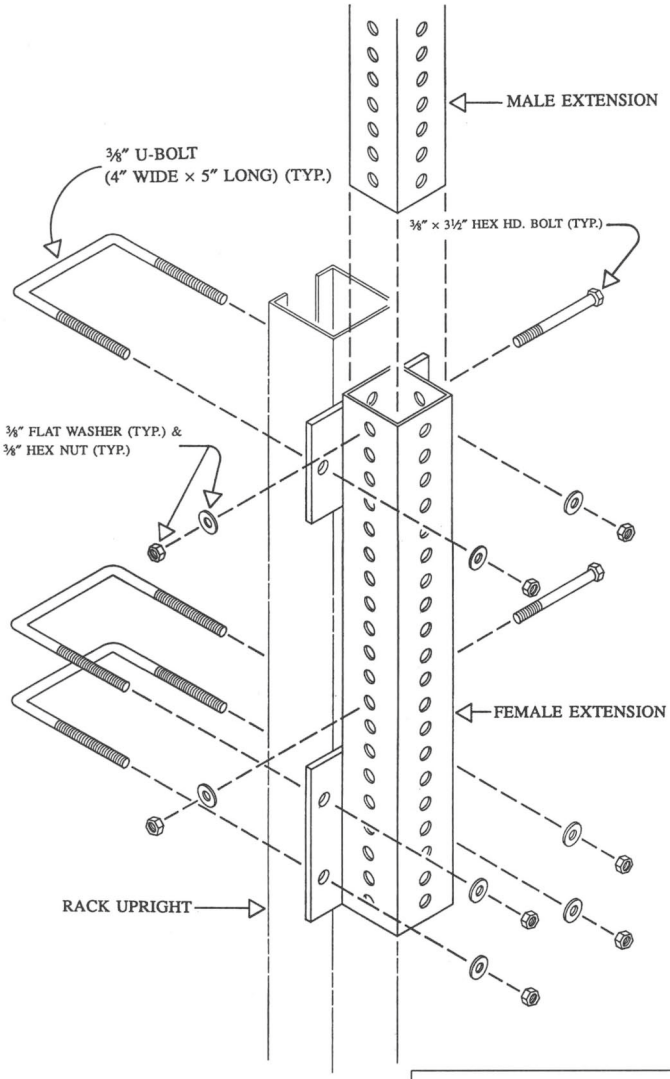

INSTALLATION OF THE MALE & FEMALE VERTICAL EXTENSION PIECES

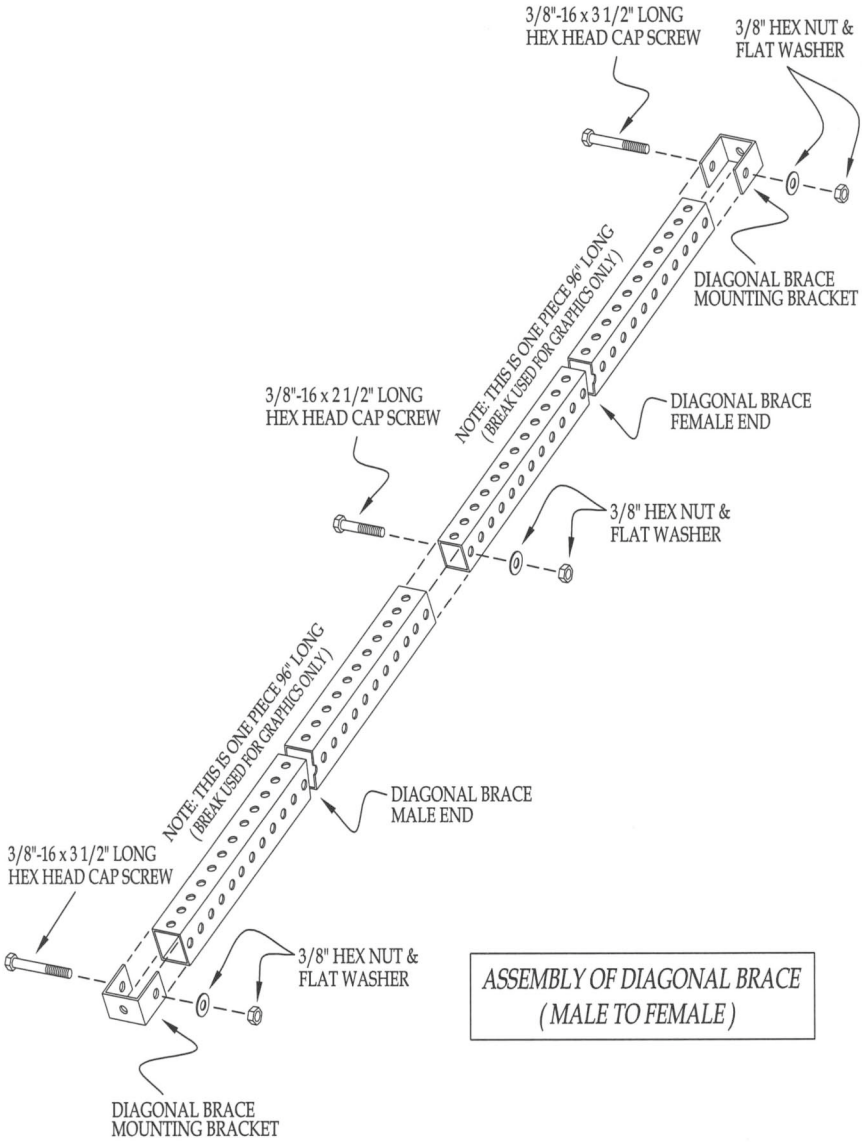

ASSEMBLY OF DIAGONAL BRACE
(MALE TO FEMALE)

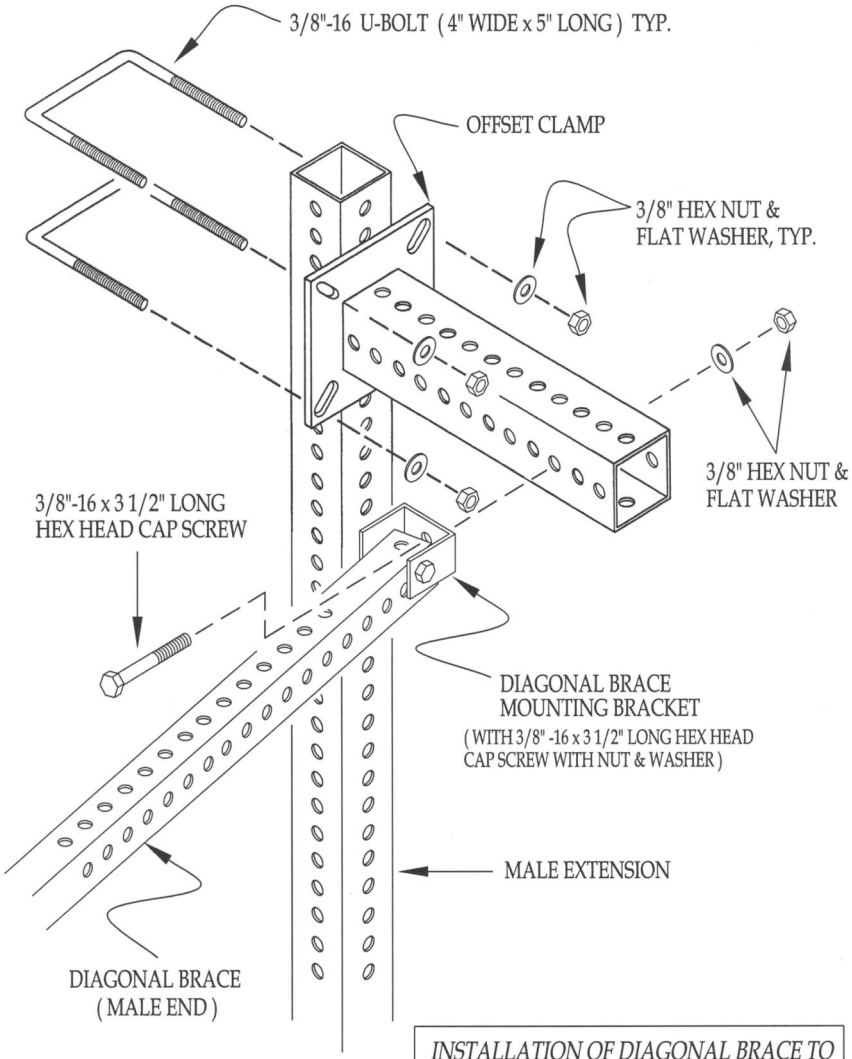

INSTALLATION OF DIAGONAL BRACE TO UPPER OFFSET FOR DIAGONAL

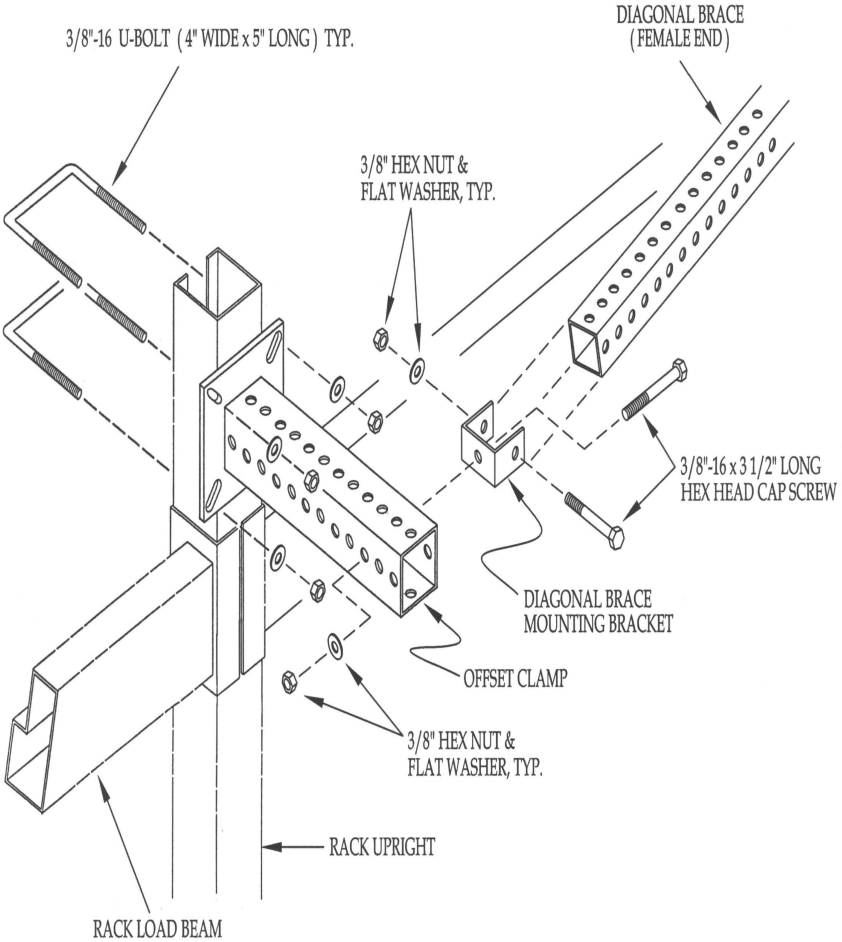

INSTALLATION OF THE DIAGONAL BRACE TO THE LOWER OFFSET FOR DIAGONAL

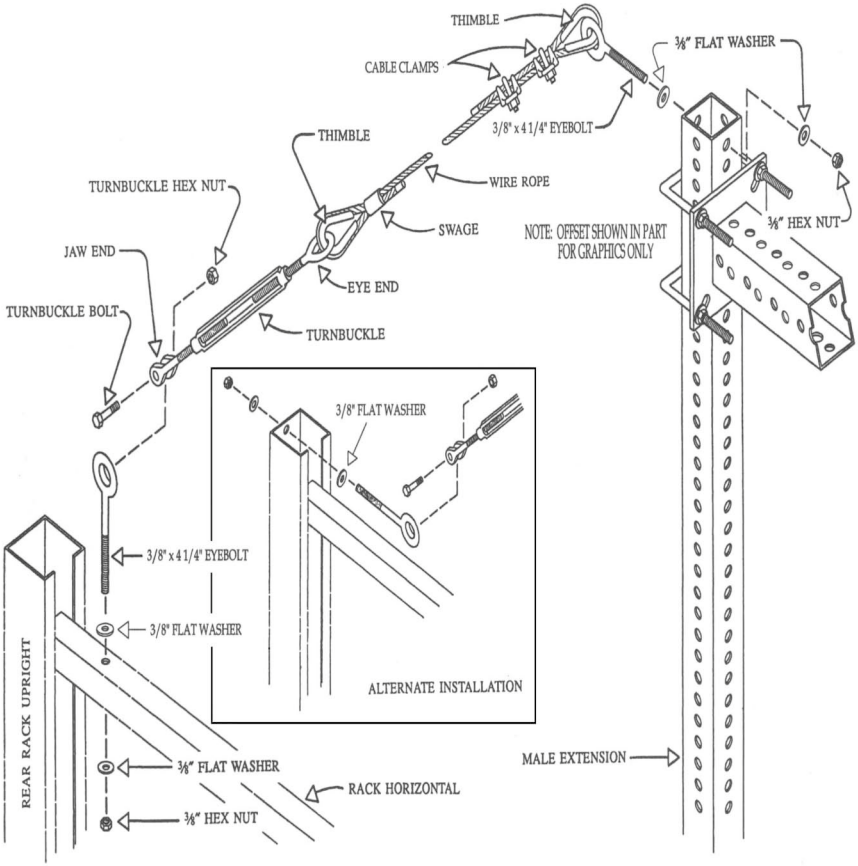

BACKSTAY BRACE INSTALLATION TO RACK EXTENSION

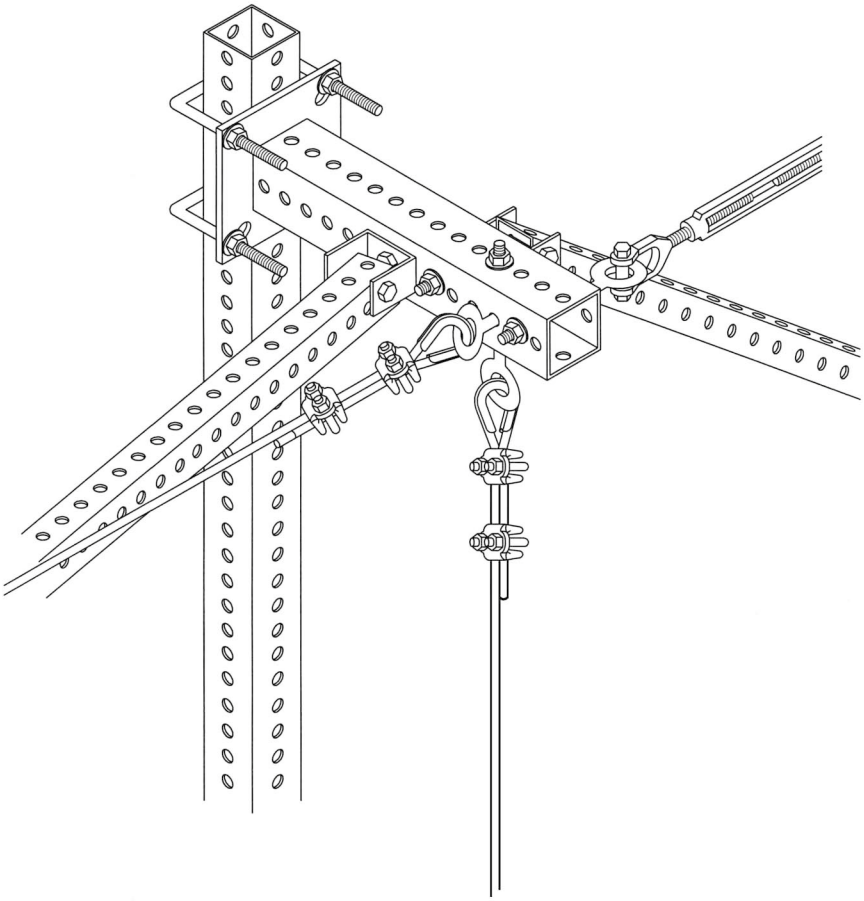

ASSEMBLED VIEW of INSTALLATION of DIAGONAL BRACES and HORIZONTAL / VERTICAL CABLES to INTERMEDIATE UPPER OFFSET CLAMP at VERTICAL EXTENSION with **OPTIONAL** *CABLE BREAK*

RACK GUARD HARDWARE IDENTIFICATION CHART

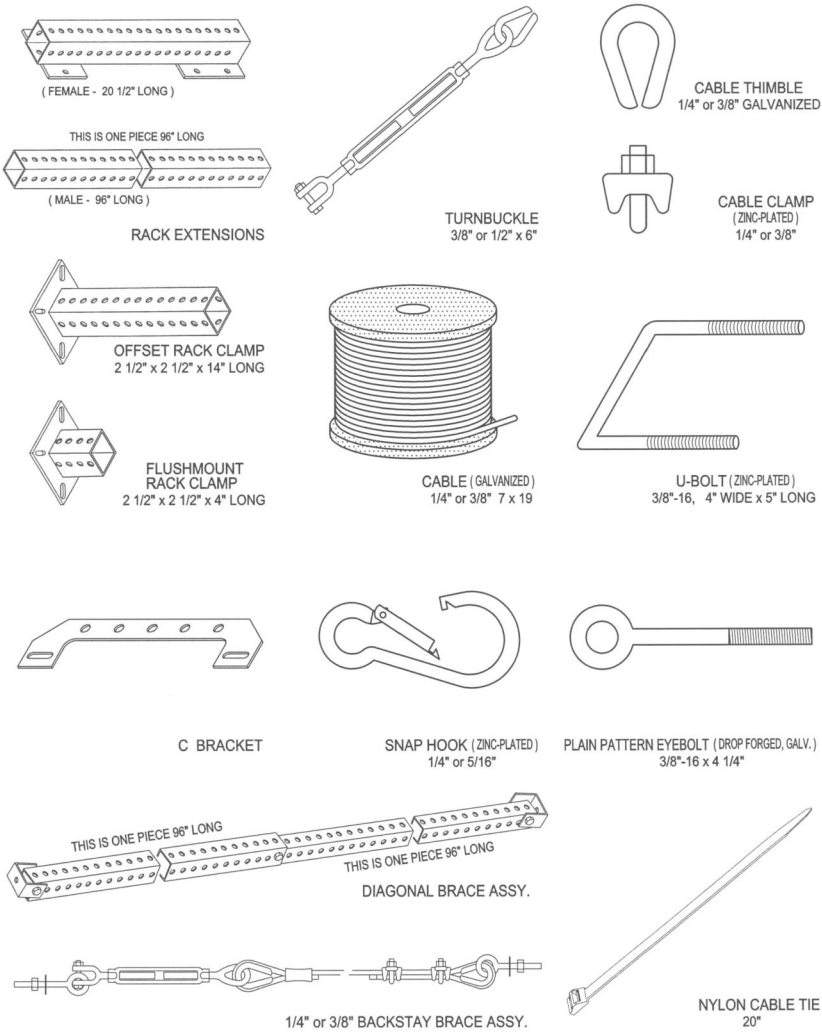

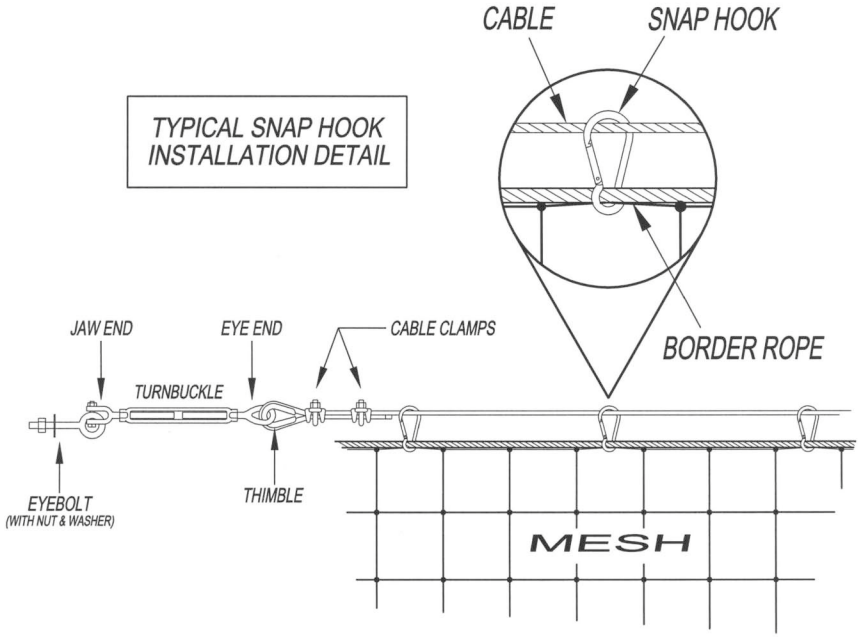
TYPICAL SNAP HOOK
INSTALLATION DETAIL
CABLE
SNAP HOOK
BORDER ROPE
JAW END
EYE END
CABLE CLAMPS
TURNBUCKLE
EYEBOLT
(WITH NUT & WASHER)
THIMBLE
MESH

NETWORKS™ INDUSTRIAL
ADJUST-A-NET™ (PATENT #6,068,085) PANELS
AND HARDWARE KITS FOR RACK GUARD

STEP 1 READ SAFETY INSTRUCTIONS STARTING ON PAGE 2.

STEP 2 READ BASIC RACK GUARD INSTALLATION INSTRUCTIONS STARTING ON PAGE 5.

STEP 3 READ KIT INSTRUCTIONS BELOW.

RACK GUARD: ENCLOSED ARE KITS WHICH INCLUDE NETS AND HARDWARE TO COVER 1, 2, OR 3 BAYS; EACH INDIVIDUAL BAY BEING UP TO 12' WIDE AND UP TO 20' HIGH IN COVERAGE. CABLE RUNS ARE TERMINATED FOR EACH NET. THE DESIGN ALLOWS THE NET TO ADJUST TO DIFFERENT SIZES BY GATHERING THE EXCESS MESH ON ONE OR TWO PERPENDICULAR SIDES. AFTER ADJUSTING, GATHER ANY EXCESS MESH IN THE CORNER WITH NYLON TIES TO THE UPRIGHT OR CABLE.

FLUSH-MOUNTED SYSTEM – CABLE IS PLACED ACROSS THE TOP AND BOTTOM OF THE BAYS BEING COVERED BY EACH NET (ATTACH TO FLUSH MOUNT RACK CLAMPS USING EYEBOLTS). THE NET IS FIRST ATTACHED TO THE CABLES IN THE FOUR CORNERS WITH SNAP HOOKS.

IF THE NET WIDTH IS THE SAME AS YOUR BAY WIDTH (I.E. 8' NET IS AN 8' BAY), THE VERTICAL SIDES OF THE NET ARE ATTACHED DIRECTLY TO THE UPRIGHT POSTS USING NYLON TIES AT A MINIMUM OF EVERY 12".

IF THE NET IS WIDER THAN YOUR BAY WIDTH, THEN ADJUST THE NET WIDTH BY GATHERING THE EXCESS MESH ON THE RIGHT OR LEFT SIDE WITH THE BORDER ROPE AND ATTACH TO THE VERTICAL UPRIGHT WITH NYLON TIES AT A MINIMUM OF EVERY 12".

IF THE NET HEIGHT IS THE SAME AS REQUIRED, THE HORIZONTAL SIDES OF THE NETS ARE ATTACHED TO THE CABLES WITH SNAP HOOKS AT A MINIMUM OF EVERY 12".

IF THE NET HEIGHT NEEDS TO BE SHORTENED, GATHER THE EXCESS MESH AT THE TOP OR BOTTOM WITH THE BORDER ROPE AND THEN TO THE CABLE WITH SNAP HOOKS AT A MINIMUM OF EVERY 12".

OFFSET SYSTEM – HORIZONTAL AND VERTICAL CABLES ARE INSTALLED BETWEEN EACH NET (ATTACH TO OFFSET RACK CLAMPS USING EYEBOLTS) AND THE NET IS FIRST ATTACHED TO THE CABLES IN THE FOUR CORNERS WITH SNAP HOOKS.

IF THE NET WIDTH IS THE SAME AS YOUR BAY WIDTH, THE VERTICAL SIDES OF THE NETS ARE ATTACHED TO THE CABLE WITH SNAP HOOKS AT A MINIMUM OF EVERY 12".

IF THE NET IS WIDER THAN YOUR BAY WIDTH, ADJUST THE NET WIDTH BY GATHERING THE EXCESS MESH ON THE RIGHT OR LEFT SIDE WITH THE BORDER ROPE AND THEN TO THE CABLE WITH SNAP HOOKS AT A MINIMUM OF EVERY 12".

IF THE NET HEIGHT IS THE SAME AS REQUIRED, THE HORIZONTAL SIDES OF THE NETS ARE ATTACHED TO THE CABLES WITH SNAP HOOKS AT A MINIMUM OF EVERY 12"

IF THE NET HEIGHT NEEDS TO BE SHORTENED, GATHER THE EXCESS MESH AT THE TOP OR BOTTOM WITH THE BORDER ROPE AND THEN TO THE CABLE WITH SNAP HOOKS AT A MINIMUM OF EVERY 12".

NOTE: NOT ALL PARTS MAY BE NEEDED FOR YOUR SPECIFIC RUNS. YOU HAVE PURCHASED A KIT FOR VARIOUS APPLICATIONS, THEREFORE, THERE MAY BE EXTRA PARTS INCLUDED. PARTS ARE NON-RETURNABLE.

FLUSH MOUNT/STARTER KIT
KIT CONTAINS:
(60') 1/4" wire cable
(4) 3/8" eyebolts
(8) 1/4" cable clamps
(4) 1/4" thimbles
(50) 5/16" snap hooks
(2 packs) 20" ties
(4) flush clamps

OFFSET MOUNT/STARTER KIT
KIT CONTAINS:
(115') 1/4" wire cable
(8) 3/8" eyebolts
(16) 1/4" cable clamps
(8) 1/4" thimbles
(100) 5/16" snap hooks
(1 pack) 20" ties
(4) offset clamps

FLUSH MOUNT/ADD-ON KIT
KIT CONTAINS:
(60') 1/4" wire cable
(4) 3/8" eyebolts
(8) 1/4" cable clamps
(4) 1/4" thimbles
(50) 5/16" snap hooks
(2 packs) 20" ties
(2) flush clamps

OFFSET MOUNT/ADD-ON KIT
KIT CONTAINS:
(115') 1/4" wire cable
(8) 3/8" eyebolts
(16) 1/4" cable clamps
(8) 1/4" thimbles
(100) 5/16" snap hooks
(1 pack) 20" ties
(2) offset clamps

EXTENSION STARTER KIT-FLUSH
KIT CONTAINS:
(2) extensions
(2) diagonal braces
(2) flush clamps
(2) backstay braces

EXTENSION STARTER KIT-OFFSET
KIT CONTAINS:
(2) extensions
(2) diagonal braces
(2) offset clamps
(2) backstay braces

EXTENSION ADD-ON KIT
KIT CONTAINS:
(1) extension
(1) backstay brace

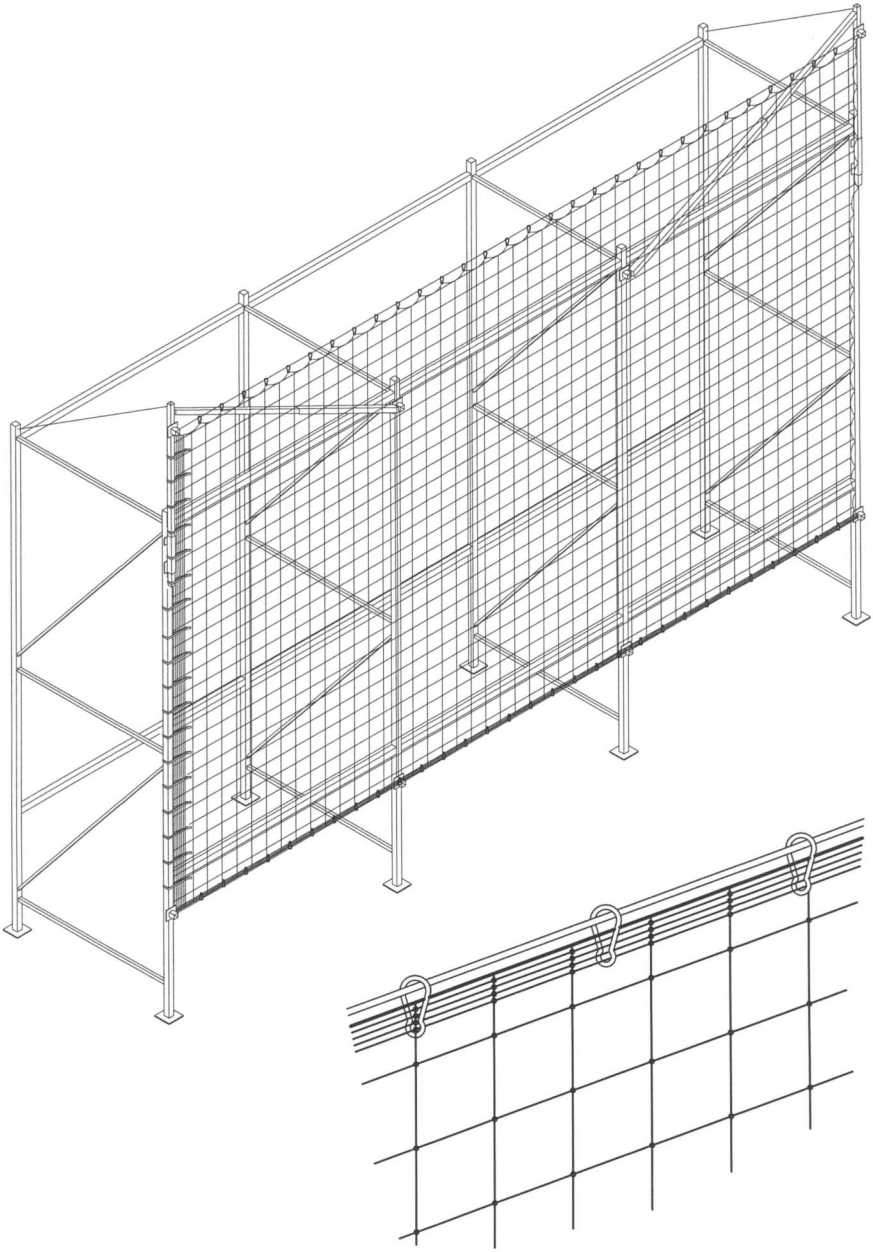

INSPECTION AND MAINTENANCE LOG

SERIAL NUMBER: _____

MODEL NUMBER: _____

DATE PURCHASED: _____

INSPECTION DATE	INSPECTION ITEMS NOTED	CORRECTIVE ACTION	MAINTENANCE PERFORMED
Approved By:			
Approved By:			
Approved By:			
Approved By:			
Approved By:			
Approved By:			
Approved By:			
Approved By:			
Approved By:			
Approved By:			
Approved By:			
Approved By:			

INSPECTION AND MAINTENANCE LOG

SERIAL NUMBER: _____

MODEL NUMBER: _____

DATE PURCHASED: _____

INSPECTION DATE	INSPECTION ITEMS NOTED	CORRECTIVE ACTION	MAINTENANCE PERFORMED
Approved By:			
Approved By:			
Approved By:			
Approved By:			
Approved By:			
Approved By:			
Approved By:			
Approved By:			
Approved By:			
Approved By:			
Approved By:			
Approved By:			

INSPECTION AND MAINTENANCE LOG

SERIAL NUMBER: _____

MODEL NUMBER: _____

DATE PURCHASED: _____

INSPECTION DATE	INSPECTION ITEMS NOTED	CORRECTIVE ACTION	MAINTENANCE PERFORMED
Approved By:			
Approved By:			
Approved By:			
Approved By:			
Approved By:			
Approved By:			
Approved By:			
Approved By:			
Approved By:			
Approved By:			
Approved By:			

WARRANTY

Equipment offered by SINCO are warranted against factory defects in workmanship and materials for a period of two years from date of installation or use by the owner, provided that this period shall not exceed two years from the date of shipment. Upon notice in writing, SINCO will promptly repair or replace all defective items. SINCO reserves the right to elect to have any defective item returned to its plant for inspection before making a repair or replacement. This warranty does not cover equipment damages resulting from abuse, damage in transit, or other damage beyond the control of SINCO. This warranty applies only to the original purchaser and is the only one applicable to our products, and is in lieu of all other warranties, expressed or implied.

SINCO

USA
3833 SALA Way
Red Wing, MN 55066-5005
Toll Free: 800-328-6146
Phone: (651) 388-8282
Fax: (651) 388-5065
www.sinco.com

Canada
260 Export Boulevard
Mississauga, Ontario L5S 1Y9
Toll Free: 800-387-7484
Phone: (905) 795-9333
Fax: (905) 795-8777
www.sinco.com

This manual is available for download at www.sinco.com

Form: 4101627
Rev: B