3M

Prevention of Pressure Sensitive Adhesive Cover Tape Jamming in Feeders with Nip Gear and/or Collection Bins Systems

Technical Bulletin – September 2001

Issue

The ability to splice tape and reel at pick-and-place facilities has promoted the use of nip gears and collection bins as a means to peel back cover tape from carrier tape. Users of these types of feeders in 8 and12mm formats sometimes experience feeder jamming when picking parts from carrier tape sealed with pressure sensitive adhesive (PSA) cover tapes. In some instances the exposed adhesive edges of the cover tape contact the nip rollers and the interior surfaces of the collection bin causing a build-up of adhesive residue and preventing the forward movement of the cover tape. This balling up of the cover tape in the collection bin (Figure 1) can result in feeder jamming, additional operator intervention and increased machine down time. This issue is not found in feeders for larger width formats due to a substantial decrease in the exposed adhesive-to-film ratio.

Figure 1

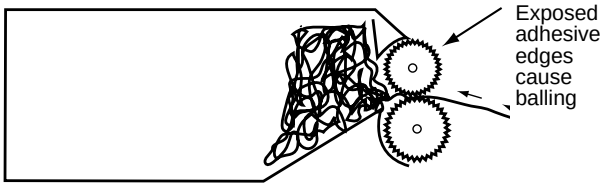

Note: This figure shows the balling up of the cover tape that restricts forward movement and causes jamming of the feeder.

Solution

For 8mm formats, 3M has designed two simple methods to prevent cover tape adhesive from contacting the nip roll assembly and the collection bin. Both of these methods prevent residue buildup and cover tape adhering to the collection bin and to itself in the collection bin. This eliminates any jamming of the feeder related to these issues.

Figure 2

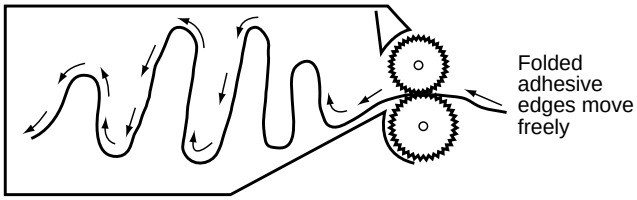

Note: This figure shows cover tape with the adhesive edges folded over and a normal flow through the collection bin.

Design Details

Tri-Roller Assembly: The initial solution was to utilize a three-roller assembly in a series to fold the adhesive edges over onto itself. In this design, the rollers are staggered along the cover tape path in a pyramidal formation (Figure 3). The adhesive edges are folded one at a time as the tape is threaded over the staggered roller at an oblique angle. The roller flange facilitates the folding of the adhesive onto itself (Figure 4). The sequence of folds is demonstrated in Figure 5. In addition to the stagger aspect of the rollers, rollers can be specially designed to provide assistance in the folds. These are noted in Appendix A.

Figure 3

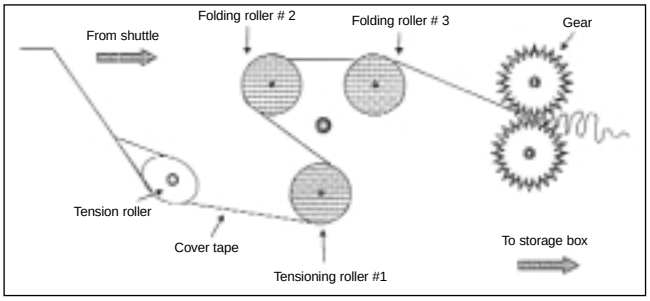

Figure 4

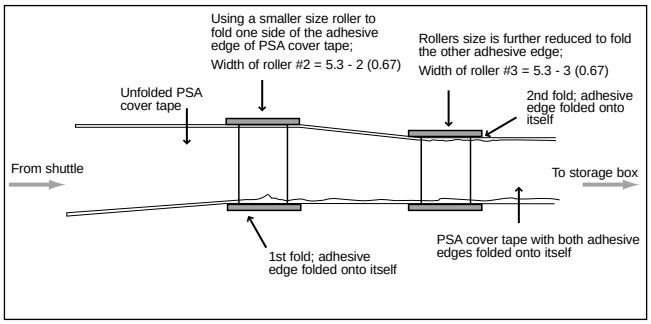

Figure 5

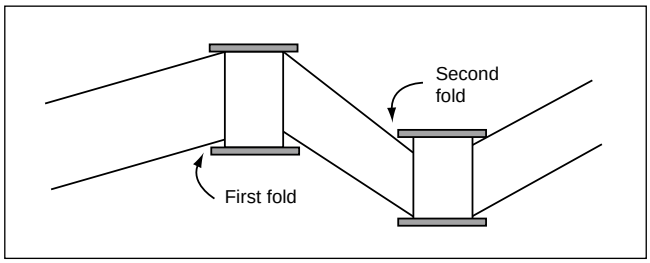

Note: The initial solution was successful in folding the adhesive edges and reducing adhesive residue and jamming, but it proved difficult to thread in the startup of a new reel.

Dual Roller Assembly – 3M Recommended Solution: Using the two-wheel design, the first wheel performs the folding of both edges at the same time (Figure 6) and the second wheel with an elliptical groove applies additional pressure to ensure a complete wet-out of the adhesive (Figure 7). Cover tape tension is needed for these folding wheels to work properly and in some instances a dancer might need to be placed in the tape path to ensure proper tension is maintained. The sequence of rollers are shown in Figures 8 and 9.

Figure 6

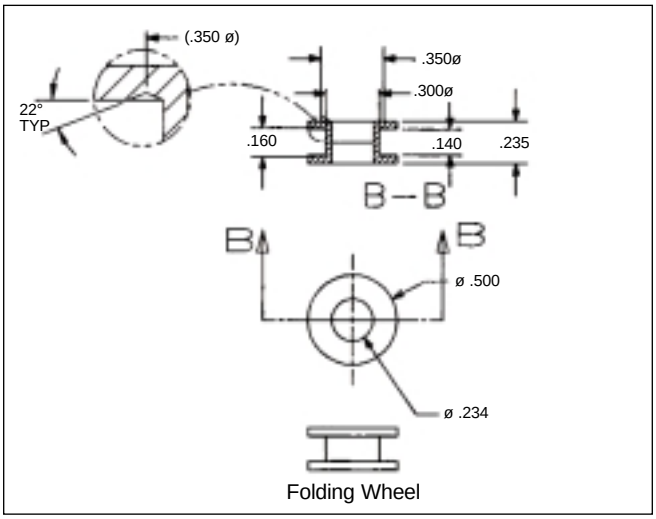

Figure 7

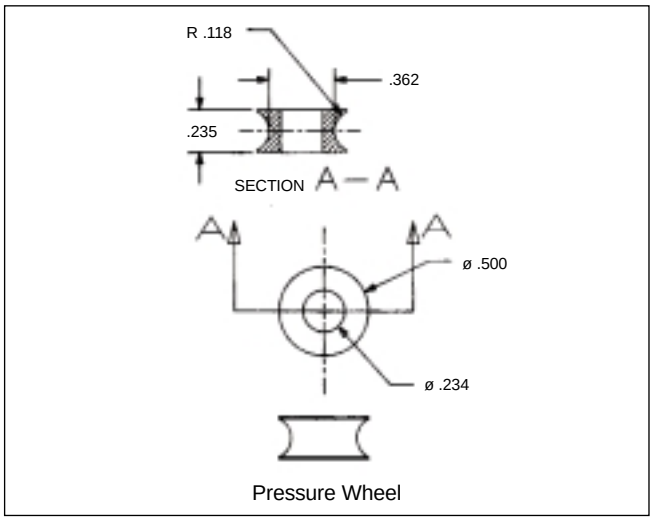

Figure 8

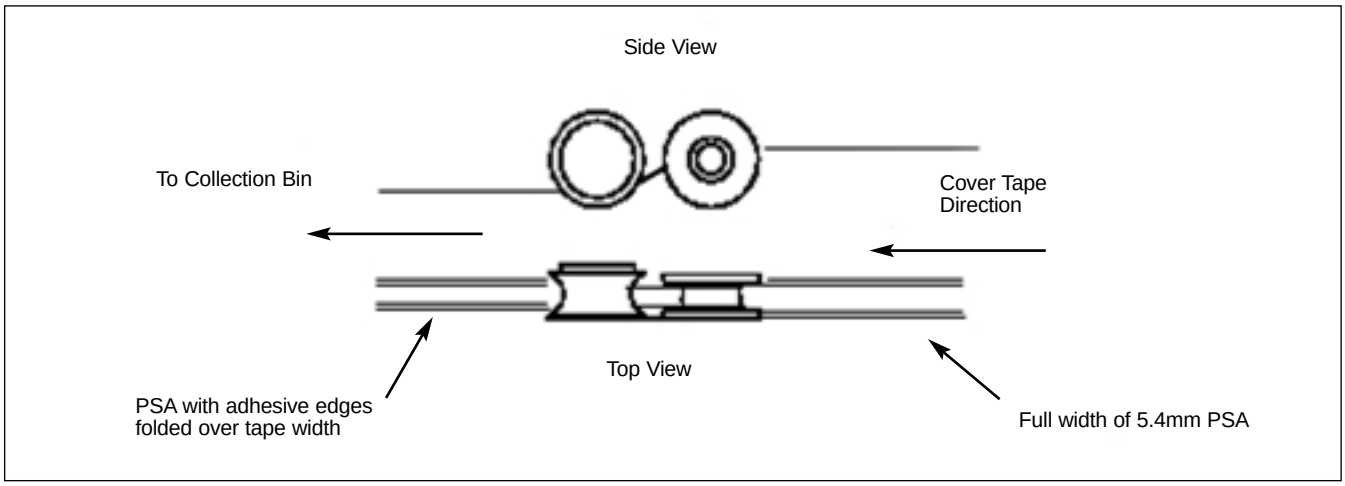

Figure 9

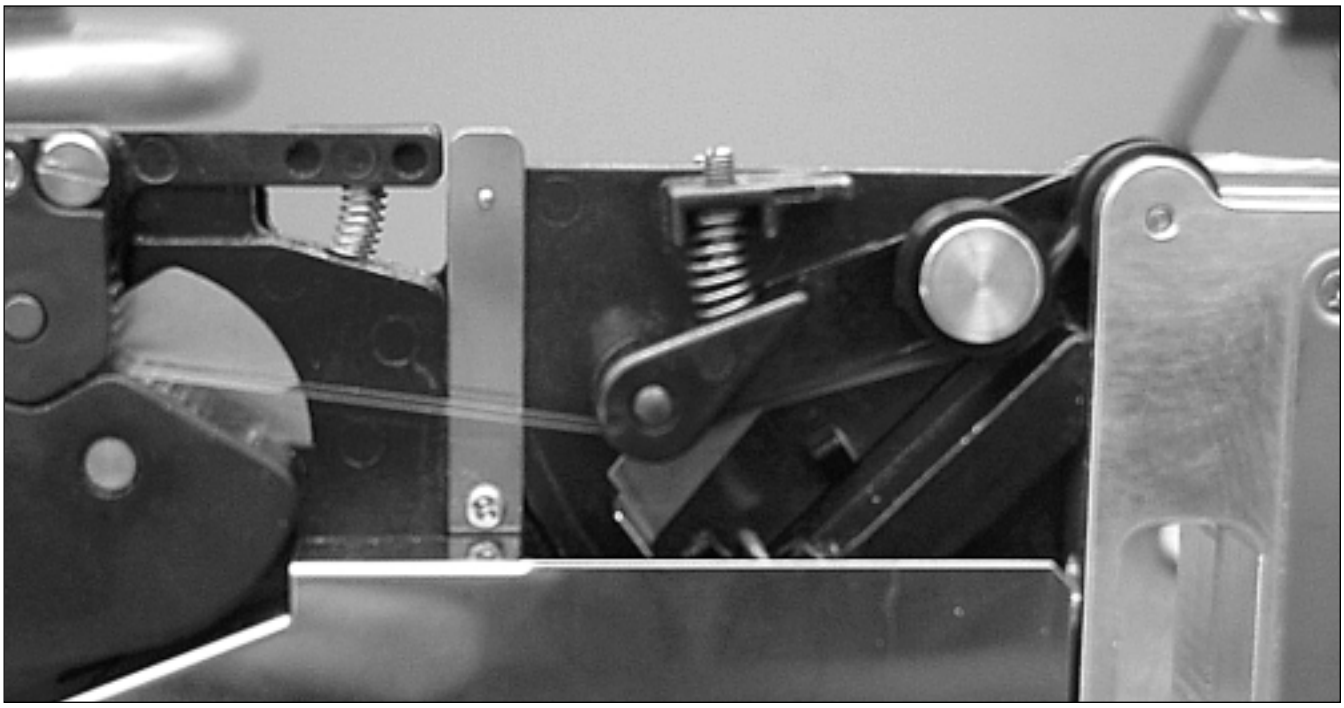

Test Results and Conclusions

Tri-Roller Assembly: The tri-roller system proved successful in folding the exposed adhesive onto itself and reducing adhesive residue and jamming. However, this system did not permit easy thread-up of new cover tape, especially in dual-up feeder systems.

Dual-Roller Assembly: The dual-roller design has been tested with the following combinations of carrier and cover tape sealed under EIA standards guidelines. (All combinations are for the 8mm carrier format; however, the same design would be effective for other widths as needed.)

- 3M™ Conductive 3000 Polycarbonate Carrier and 3M™ Non-Conductive 2656 and 3M™ Conductive 2666 Pressure Sensitive Cover Tapes
- 3M Conductive 3000 Polycarbonate Carrier and 3M™ Non-Conductive 2658 and 3M™ Conductive 2668 High Shear Pressure Sensitive Cover Tapes
- 3M Conductive 3000 Polycarbonate Carrier and 3M™ Static Dissipative 2675 Heat Activated Cover Tape

The results showed proper functioning of the feeder advancement system, no adhesive residue on the take-up nip roll gears and no jamming in the collection bin. This results in proper advancement of the cover tape for proper removal while the feeders are running. All tests were performed using a Siemens Siplace Model KL-J6-0487, Art #00141096S01 and Model KL-JN-1150, Art #00141096-01. (Feeders were provided compliments of Siemens – U.S.A.).

Appendix A

Other Possible Roller Concepts

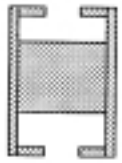

5a. Roller with hook flange to prevent cover tape slipping out of roller

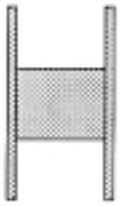

5b. Roller with over-sized flange to prevent cover tape slipping out of roller

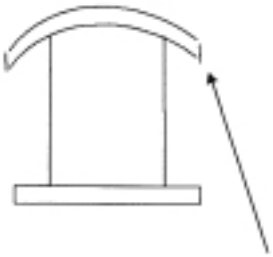

5c. Another version of folding roller, its curved-in side flange seems to facilitate the folding of adhesive edge

Important Notice

3M

Electronic Handling & Protection Division
Surface Mount Supplies

6801 River Place Blvd.
Austin, TX 78726-9000
800/MMM TAPE (800/666 8273)
FAX 800/826 8893
www.3M.com/ehpd

Minimum 10%
Post-consumer fiber

Printed in USA.