3M™ Scotchcast™ Duct Sealing Kit 4416

Instructions

October 2011
78-0013-6243-9-A

1.0 General

The Scotchcast™ Duct Sealing Kit 4416 helps prevent water and gas from entering a manhole or C.O. through a cable duct. Each kit contains enough material to plug four ducts.

2.0 Kit Contents

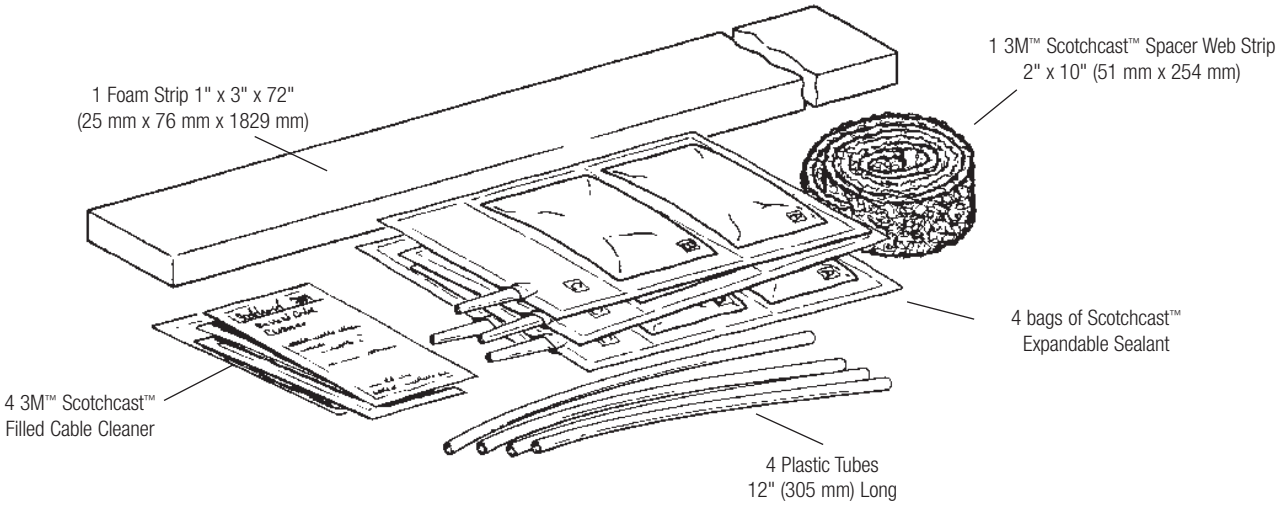

3.0 Cable Duct Sealing Procedure

Note: If water is flowing through the duct, stuff the duct with rags or other material to temporarily stop water flow. Water flow must be stopped during the foam cure time to ensure proper sealing of the duct.

3.1 Clean cables and duct with a 3M™ Scotchcast™ Filled Cable Cleaner 4415 pad. Place the pad on the end of a tube to clean hard-to-reach areas. Do not leave pad in duct. Cable and duct do not have to be wiped dry.

Note: Carefully follow health and safety information given on the label for the 3M™ Scotchcast™ Filled Cable Cleaner 4415 or the Material Safety Data Sheet.

3.2 Wrap crumpled paper around the cable and push tightly into duct to a depth of 6" (152 mm). This is required to force foam around cable ensuring a good seal and will make it easier to re-enter the duct if required in the future.

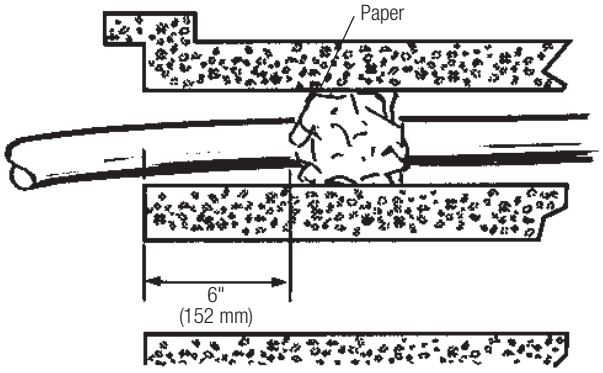

3.3 Wrap 3M Scotchcast Spacer Web around the cable so it is slightly larger (in diameter) than the inside of the duct. Cut off the excess length.

3.4 Push the spacer web into duct using plastic tube.

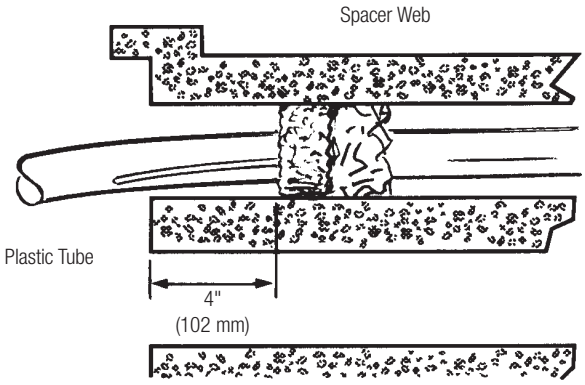

3.5 Wrap the foam strip around the cable and insert it into the duct. The foam strip should be flush with the duct entrance and should fit snugly between the cable and duct.

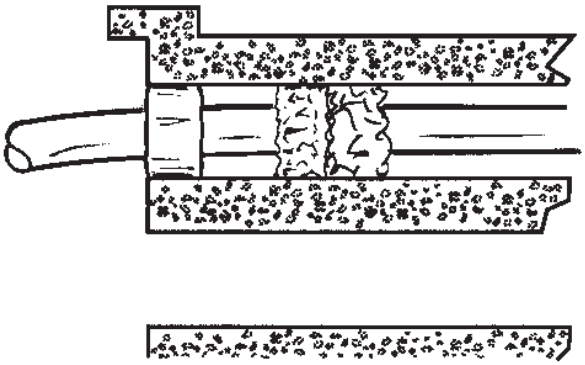

3.6 Cut one of the 12" (305 mm) plastic tubes in half making two 6" (152 mm) tubes. Insert the 6" tubes within the last wrap of the foam strip. Position one tube at the 12 o'clock position and the other at either the 3 or 9 o'clock position.

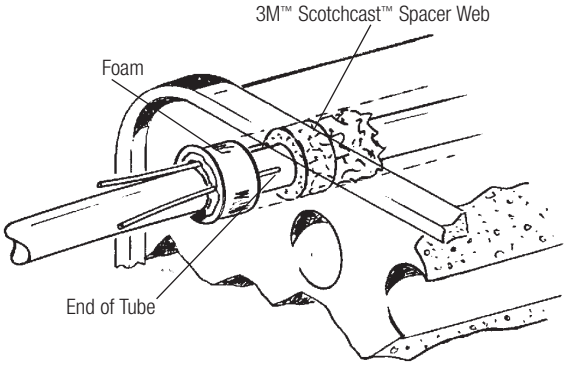

3.7 Mix one bag of sealant foam according to the instructions on the bag.

Note: Carefully follow health, safety and disposal information given on 3M™ Scotchcast™ Expandable Sealant label or Material Safety Data Sheet.

3.8 Insert the nozzle of the bag into end of the tube located at the 3 or 9 o'clock position.

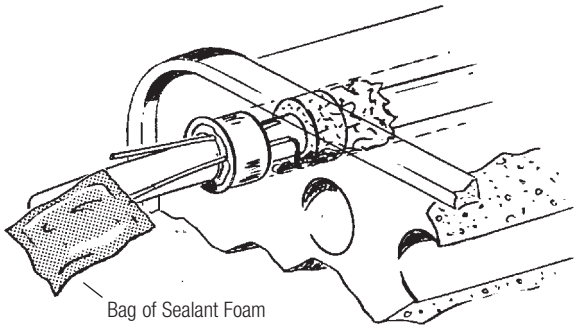

3.9 Squeeze the sealant out of the bag and into the tube.

3.10 Leave tubes in the duct, and let excess sealant drain out.

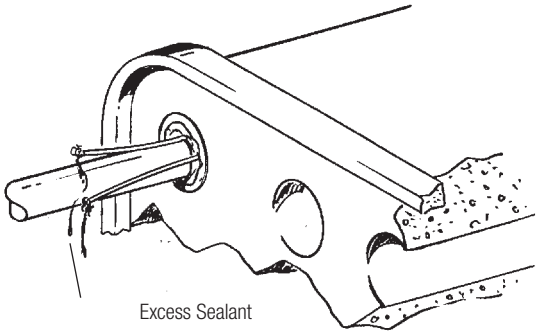

Note: Once the compound has been injected, the cable should not be moved for at least one hour.

4.0 Removal of Sealant from Duct

4.1 Remove foam collar.

4.2 Use long screw driver or rod to make a hole through the sealant.

4.3 Use a key hole saw to make cuts as shown above.

4.4 Use a rod or screwdriver to hook pieces of compound and pull them out of the duct.

4.5 When one quadrant of the compound is removed from the duct, move cable into the void. This will allow better access to remaining compound.

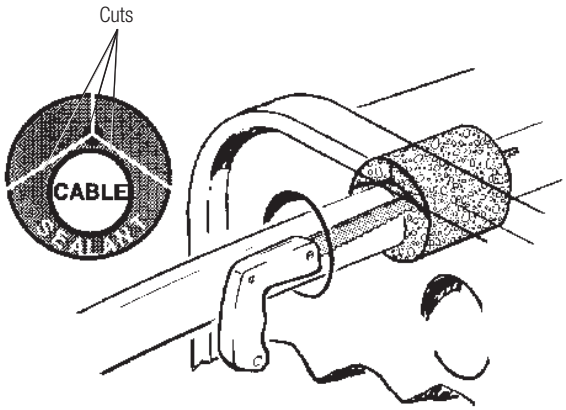

3M and Scotchcast are trademarks of 3M Company.

Important Notice

All statements, technical information, and recommendations related to 3M's products are based on information believed to be reliable, but the accuracy or completeness is not guaranteed. Before using this product, you must evaluate it and determine if it is suitable for your intended application. You assume all risks and liability associated with such use. Any statements related to the product which are not contained in 3M's current publications, or any contrary statements contained on your purchase order shall have no force or effect unless expressly agreed upon, in writing, by an authorized officer of 3M.

Warranty; Limited Remedy; Limited Liability.

This product will be free from defects in material and manufacture for a period of one (1) year from the time of purchase. **3M MAKES NO OTHER WARRANTIES INCLUDING, BUT NOT LIMITED TO, ANY IMPLIED WARRANTY OF MERCHANTABILITY OR FITNESS FOR A PARTICULAR PURPOSE.** If this product is defective within the warranty period stated above, your exclusive remedy shall be, at 3M's option, to replace or repair the 3M product or refund the purchase price of the 3M product. **Except where prohibited by law, 3M will not be liable for any indirect, special, incidental or consequential loss or damage arising from this 3M product, regardless of the legal theory asserted.**

3M

Communication Markets Division
6801 River Place Blvd.
Austin, TX 78726-9000
1-800-426-8688
www.3M.com/Telecom

Please Recycle. Printed in USA.
© 3M 2011. All Rights Reserved.
78-0013-6243-9-A