Design Number 3MU/FRD 120-18

October 29, 2012
FIRE RESISTANT GREASE DUCT
3M Company
3M Fire Barrier™ Duct Wrap 615+
ASTM E 2336-04 (2009) and
ICC-ES Acceptance Criteria for Grease Duct Enclosure Systems (AC101)
Noncombustibility Test (ASTM E 136) – Pass
Fire Resistance Test (ASTM E 119) – 2 hr
Durability Test (ASTM C 518 modified) – Pass
Internal Fire Test – 4 hr @ 500°F and 30 minutes @ 2000°F – Pass
Fire-Engulfment Test (ASTM E 119 Exposure) – 2 hr

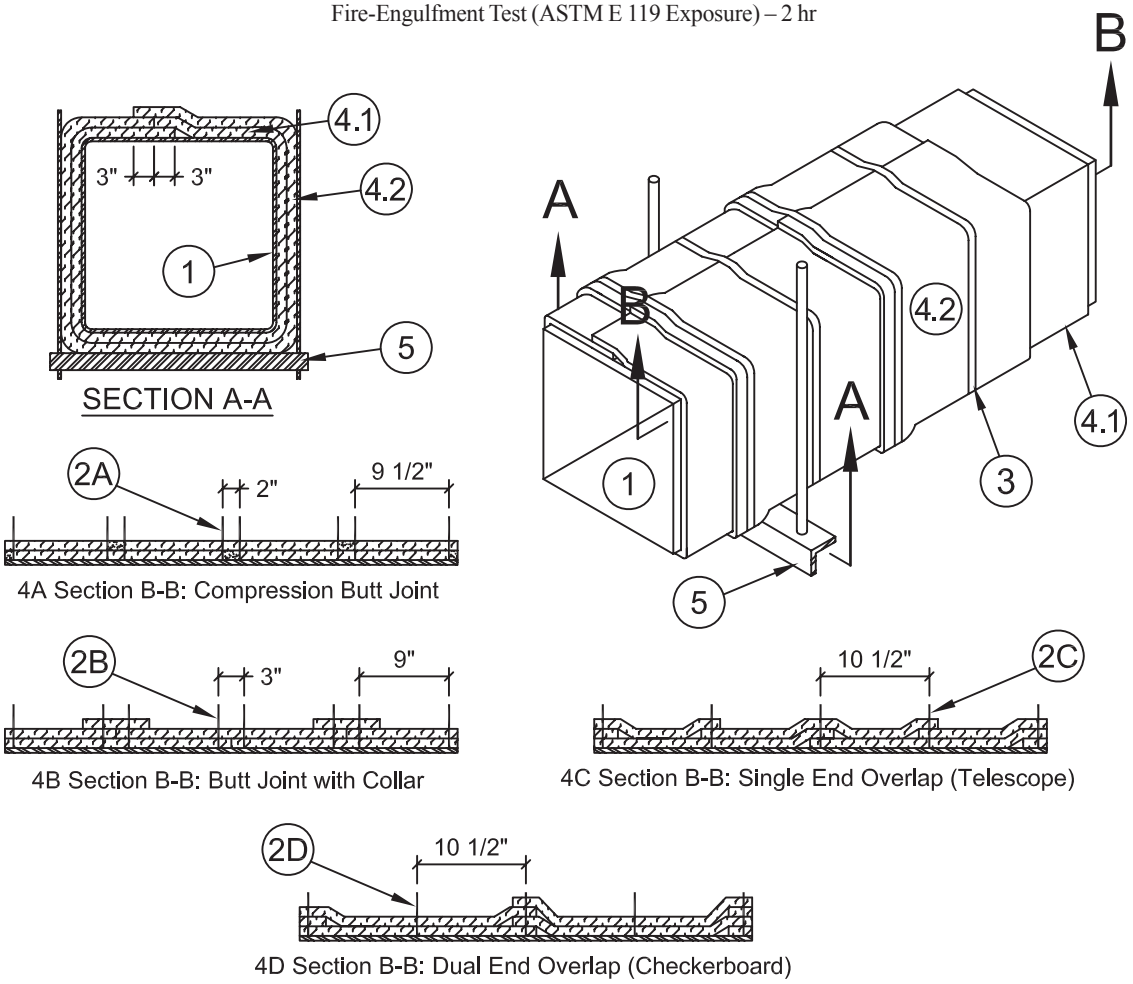

Figure 1

1. GREASE DUCT: Use a continuously-welded, liquid-tight, L-shaped, rectangular duct system with horizontal and vertical shafts constructed of 16 GA sheet steel with a maximum 2304 inch^2 area and a maximum 48-inch dimension. When required, equip the duct with a pre-fabricated access door (Item 6) or field-fabricated access door (Item 7).
   A. Construct the grease duct using sections affixed to each other with welded joints.
   B. Reinforce the grease duct to IMC or NFPA 96 requirements designed to carry the weight of the grease duct assembly covered with two layers of insulation (Item 4) under a fire load equivalent to the ASTM E 2336 exposure and the ASTM E 119 time-temperature curve.
   C. Rigidly support the grease duct (Item 1) as specified in Item 5 or in accordance with IMC or NFPA 96 requirements when those requirements are greater.
   D. Protect the annular space around the grease duct (Item 1) passing through a fire-rated assembly with an Intertek-certified, compatible, 3M, penetration firestop system, refer to Section 10, having the same fire rating as the assembly.
2. FASTENERS: Refer to Figure 1. Weld minimum 12 GA, 6-1/2-inch long, copper-coated, steel insulation pins or 12 GA, insulated cup head steel pins to the grease duct (Item 1). Match the following fastener method with corresponding insulation (Item 4) method.
   A. Compression Butt Joint: Refer to 4A Section View B-B. Locate pins at all blanket overlaps, on all sides of the grease duct (Item 1), and meet the following requirements.
      i. Space pins maximum 12 inches apart in rows across the width of grease duct (Item 1). Locate pins maximum 6-3/4 inches from the edges of the grease duct (Item 1). Refer to section view A-A.
      ii. Space the rows of pins as follows: use pattern nominal 9 inches apart, then maximum 2 inches apart, then nominal 9 inches apart along the length of the grease duct (Item 1). Refer to Item 4A section view B-B.

[1] ACCEPTANCE CRITERIA FOR GREASE DUCT ENCLOSURE ASSEMBLIES, AC101, Approved April 2001 (Editorially revised October 2004) states, "The system may be installed with zero clearance from the insulating materials to combustibles."

DESIGN NO. 3MU/FRD 120-18 *continued*

iii. After insulation (Item 4A) is installed, place minimum 2-1/2 x 2-1/2-inch square, galvanized steel, self locking washer clips onto all insulation pins.

iv. After clips are installed, cut off or bend flush with insulation (Item 4A) the pins that are too long.

B. Butt Joint with Collar: Refer to 4B Section View B-B. Locate pins at all blanket overlaps, on all sides of the grease duct (Item 1), and meet the following requirements.

i. Space pins maximum 12 inches apart in rows across the width of grease duct (Item 1). Locate pins maximum 6-3/4 inches from the edges of the grease duct (Item 1). Refer to section view A-A.

ii. Space the rows of pins as follows: use pattern nominal 9 inches apart, then maximum 3 inches apart, then nominal 9 inches apart along the length of the grease duct (Item 1). Refer to Item 4B section view B-B.

iii. After insulation (Item 4B) is installed, place minimum 2-1/2 x 2-1/2-inch square, galvanized steel, self-locking washer clips onto all insulation pins.

iv. After clips are installed, cut off or bend flush with insulation (Item 4B) the pins that are too long.

C. Single End Overlap (Telescope): Refer to 4C Section View B-B. Locate pins at all blanket overlaps, on all sides of the grease duct (Item 1), and meet the following requirements.

i. Space pins maximum 12 inches apart in rows across the width of grease duct (Item 1). Locate pins maximum 6-3/4 inches from the edges of the grease duct (Item 1). Refer to section view A-A.

ii. Space the rows of pins maximum 10-1/2 inches apart along the length grease duct (Item 1). Where pieces of insulation (Item 4C) are butted together, space pins a maximum 1-1/2 inches from the edge of the insulation. Refer to Item 4C section view B-B.

iii. After insulation (Item 4C) is installed, place minimum 2-1/2 x 2-1/2-inch square, galvanized steel, self-locking washer clips onto all insulation pins.

iv. After clips are installed, cut off or bend flush with insulation (Item 4C) the pins that are too long.

D. Dual End Overlap (Checkerboard): Refer to 4D Section View B-B. Locate pins at all blanket overlaps, on all sides of the grease duct (Item 1), and meet the following requirements.

i. Space pins maximum 12 inches apart in rows across the width of grease duct (Item 1). Locate pins maximum 6-3/4 inches from the edges of the grease duct (Item 1). Refer to section view A-A.

ii. Space the rows of pins maximum 10-1/2 inches apart along the length grease duct (Item 1). Where pieces of insulation (Item 4D) are butted together, space pins a maximum 1-1/2 inches from the edge of the insulation. Refer to Item 4D section view B-B.

iii. After insulation (Item 4D) is installed, place minimum 2-1/2 x 2-1/2-inch square, galvanized steel, self-locking washer clips onto all insulation pins.

iv. After clips are installed, cut off or bend flush with insulation (Item 4D) pins that are too long.

3. BANDING: Do not use banding for the installation of insulation method (Item 4A), Compression Butt Joint. Banding is an option to fastener methods (Items 2B, 2C and 2D) but not fastener method (Item 2A). After insulation (Item 4) is installed, apply minimum 1/2 inch wide, 0.015-inch thick stainless steel bands or minimum 1/2 inch wide, 0.020-inch thick carbon steel bands and secured with minimum 1-inch long stainless or carbon steel crimp clamps to be used with corresponding banding type. When needed to ease installation, use filament tape as a temporary hold for the insulation (Item 4) prior to banding. Place banding a maximum 1-1/2 inches from all insulation (Item 4) edges and a maximum of 10-1/2 inches on center (O.C.). Tension the banding to hold the insulation (Item 4) in place without cutting or damaging the insulation (Item 4) or grease duct (Item 1).

4. CERTIFIED MANUFACTURER: 3M Company

CERTIFIED PRODUCT: 3M Fire Barrier™ Duct Wrap

MODEL: 615+

INSULATION: Apply the non-combustible (ASTM E136) and durable (ASTM C518) insulation in two layers of nominal 1-1/2-inches thick, 6-pcf density blanket, made of calcium-, silica-, and magnesium-oxide (CSM) fibers, encapsulated with polypropylene-foil or aluminized polyester-foil scrim over the entire surface of the grease duct (Item 1). Apply the inner first layer (Figure 1, 4.1) in accord with one of the four methods (A, B, C, or D) that follow. Offset the second outer layer (Figure 1, 4.2) one half the width of the inner first layer (Figure 1, 4.1) so that the joints of the inner first layer (Figure 1, 4.1) are covered by and approximately in the center of the second outer layer (Figure 1, 4.2). Apply the second outer layer (Figure 1, 4.2) in accord with the same method selected for the first inner layer (Figure 1, 4.1). Use blanket, available in various widths, that is fully encapsulated or single faced with a polypropylene-foil or polyester-foil scrim. Expose a foil-faced side of insulation to view. Wrap one layer of insulation around the grease duct (Item 1) perimeter so that each terminating end of insulation overlaps onto the starting end of insulation a minimum of 3 inches at all transverse joints. Stagger the transverse overlap location so that no two consecutive adjacent overlaps align. Refer to section view A-A for transverse overlap section view. Cover all visually-exposed ends and edges of insulation with nominal 4-inch wide, pressure-sensitive, aluminum foil tape.

A. Compression Butt Joint: Refer to Item 4A section view B-B. Wrap the grease duct (Item 1) with two layers of insulation installed with compression butt joints at all circumferential joints. Apply the first layer, center pieces of insulation (Item 4A) over 2-inch-wide pin bay, so that each piece nominal 24-inch-wide blanket occupies two (2) full 9-inch-wide bays and three (3) full 2-inch-wide bays. Compress each edge of each piece of insulation together and butt to preceding edge of insulation in 2-inch-wide bays. After installation, each piece of installed insulation width is 2 inches less than insulation nominal width. (Example: each piece of nominal 24-inch-wide insulation when installed is 22 inches wide.) Verify all insulation butt joints are compressed minimum 50% at compression butt joints. Offset the second layer of insulation so that the compression butt joint of the first layer of insulation is centered under the second layer of insulation and install in same manner as first layer of insulation.

B. Butt Joint with Collar: Refer to Item 4B section view B-B. Wrap the grease duct (Item 1) with two layers of insulation installed with butt joints at all circumferential joints. Apply the first layer, center pieces of insulation (Item 4A) over 3 inch wide pin bay, so that each piece nominal 24-inch-wide blanket occupies two (2) full 9-inch-wide bays and one (1) full 3-inch-wide bays and half of two (2) 3-inch-wide bays at each circumferential edge. Butt each end of each piece of insulation together with preceding edge of insulation. Each piece of installed insulation width is its nominal width. (Example: each piece of nominal 24-inch-wide insulation when installed

is 24 inches wide.) Offset the second layer of insulation so that the butt joint of the first layer of insulation is centered under the second layer of insulation and install in same manner as first layer of insulation. Place and center 6-inch-wide collar of insulation over the butt joint. Overlap 6-inch-wide collar onto each adjacent insulation 3 inches. Verify all insulation butt joints with collars are three layers of insulation in overall thickness.

C. Single End Overlap (Telescope): Refer to Item 4C section view B-B. Wrap the grease duct (Item 1) with two layers of insulation installed with 3-inch minimum overlaps at all longitudinal joints. Overlap each adjacent insulation edge with the edge of the next piece of insulation. Verify all insulation overlaps are three layers of insulation in overall thickness.

i. Starting at one end of the grease duct (Item 1), apply the first piece of insulation around the grease duct (Item 1) to overlap fasteners (Item 2C). Refer section view A-A.

ii. Position and overlap the leading edge of the second piece of insulation nominally 3 inches over the flush edge of the first piece of insulation. Place the opposite edge of the second piece of insulation flush against the surface of the grease duct (Item 1). An "S-shaped" cross section of the insulation is created. Refer to Item 4C section view B-B.

iii. Apply all additional pieces of insulation as "S-shaped" cross section of the insulation in compliance with Item 4Cii.

iv. Position the second layer of insulation so that the joint of the first layer of insulation is centered under the second layer of insulation and install in same manner as first layer wof insulation.

D. Dual End Overlap (Checkerboard): Refer to Item 4D section view B-B. Verify all insulation overlaps are a minimum 3 inches in overall thickness. Do not align two consecutive insulation end overlaps. Overlap each full width insulation edge with the edge of the "gull wing" (-v-) shaped piece of insulation. Install insulation with zero clearance at the overlaps, or in the field between overlaps. Verify all insulation overlaps are four layers of insulation in overall thickness.

i. Wrap the first piece of insulation around the grease duct (Item 1) so that the insulation is flush against the surface of the grease duct (Item 1). Position the starting end of the insulation to overlap pins (Item 2A) a minimum of 1-1/2 inches while the edges of the insulation overlap the rows of pins (Item 2B) a minimum of 1-1/2 inches.

ii. Position the second piece of insulation nominally 18 inches from the edge of the first piece of insulation. Install the second piece in the same manner as the first.

iii. Cover the grease duct (Item 1) that is exposed between the edges of the first two pieces of insulation with another piece of insulation. Position the starting end of the insulation to overlap pins (Item 2A) a minimum of 1-1/2 inches while the edges of the insulation overlap the adjacent edges of the two pieces installed insulation a minimum of 1-1/2 inches.

iv. Position the second layer of insulation so that the first layer of insulation is centered under the second layer of insulation and install in same manner as first layer of insulation.

5. SUPPORTS: If the grease duct is 24-inches x 24-inches or smaller, support the grease duct (Item 1) with insulation (Item 4) using a un-insulated "trapeze" system composed of a minimum 2 x 2 x 1/8-inch steel angle as the trapeze cross-member and two (2), minimum 3/8-inch diameter, all-thread, steel rods connected using nuts and washers. For ducts larger than 24-inches x 24-inches, support the grease duct (Item 1) with insulation (Item 4) using a un-insulated "trapeze" system composed of a minimum 2 x 2 x 1/4-inch steel angle as the trapeze cross-member and two (2), minimum 1/2-inch diameter, all-thread, steel rods connected using nuts and washers. Connect the all-thread steel rods to the bottom of the floor assembly using an attachment method designed to carry the weight of the grease duct (Item 1) with insulation (Item 4) under a fire load equivalent to ASTM E 119 time-temperature curve. Place one (1) all-thread steel rod at each end of trapeze cross-member. Center grease duct (Item 1) with insulation (Item 4) on trapeze cross-member. Space all-thread steel rods a maximum 6 inches from surface of the insulated grease duct or allowing all-thread steel rods to contact with the insulation (Item 4) at the minimum distance. Extend trapeze cross-member at least 2 inches past each all-thread, steel rod. Space trapeze supports a maximum 60 inches on center.

6. CERTIFIED MANUFACTURER: 3M Company

CERTIFIED PRODUCT: 3M Fire Barrier™ Grease Duct Access Door

MODELS:

- 000-51115-16584-9 (door for 20x20 opening),
- 000-51115-16583-2 (door for 12x8 opening), and
- 000-51115-16582-5 (door for 10x6 opening)

CERTIFIED MANUFACTURER: Ductmate Industries, Inc.

CERTIFIED PRODUCT: Grease Duct Access Door

MODELS: Ductmate ULtimate Door ™

- D2020ULWS (door for 20x20 opening),
- D128ULWS (door for 12x8 opening), and
- D106ULWS (door for 10x6 opening)

ACCESS DOOR ASSEMBLY: When required, apply an access door and insulated cover plate as described:

A. OPTIONAL PRE-FABRICATED ACCESS DOOR: Mark a clean-out access opening location on the grease duct (Item 1) with insulation (Item 4) at its mid-height along the horizontal section. Cut an opening (maximum 22 x 22 inches) in the insulation (Item 4) the same size as the outside dimension of the desired pre-fabricated access door model. Remove and discard the cut insulation (Item 4). Cut an opening (maximum 20 x 20 inches) into the side of the grease duct (Item 1) according to the manufacturer's instructions for the size of the pre-fabricated access door to be installed. Install and tightly secure the pre-fabricated access door in accordance with the manufacturer's instructions to the grease duct (Item 1). Fit pre-fabricated access door with four (4), 3/8-inch diameter, corner-thumb bolts through the exterior face.

B. CERTIFIED MANUFACTURER: 3M Company

CERTIFIED PRODUCT: 3M Fire Barrier™ Duct Wrap

MODEL: 615+

DESIGN NO. 3MU/FRD 120-18 *continued*

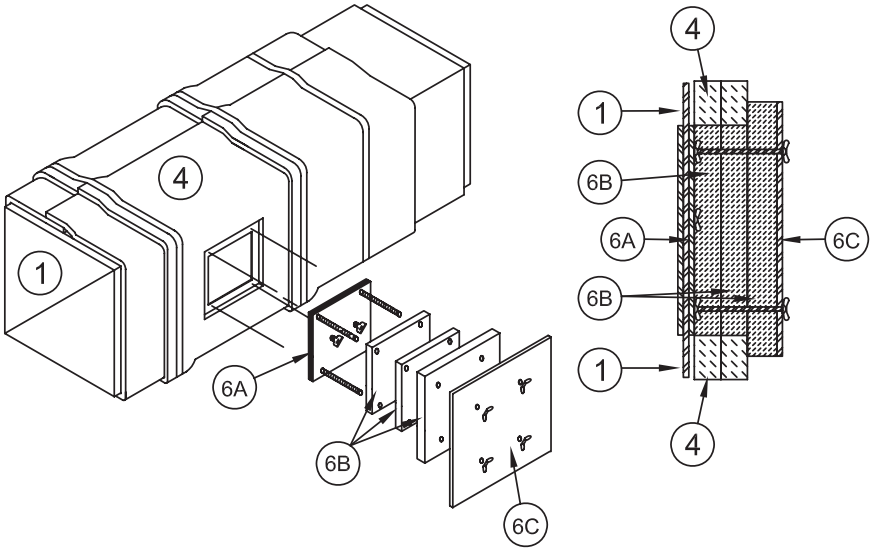

Figure 2 – 3M Pre-fabricated Access Door

Figure 2 – 3M or Ductmate Pre-fabricated Access Door

ACCESS INSULATION: Remove the four (4), 3/8-inch diameter, corner-thumb bolts and replace them with four (4), 3/8-inch diameter, all-thread, steel rods extending from pre-fabricated access door (Item 6A). Apply three (3) layers of access insulation over the pre-fabricated access door (Item 6A) as follows. Cut the first piece of rectangular access insulation a minimum 1/4 inch larger than the clean-out access opening. Position, square, and impale the first piece of the access insulation over the four (4), 3/8-inch diameter, all-thread, steel rods extending from pre-fabricated access door (Item 6A). Press the first piece of access insulation flush over the pre-fabricated access door (Item 6A). Compress and abut the cut edges of the first piece of the access insulation against the cut edges of opening in the insulation (Item 4). Cut a second piece of access insulation the same size as the first piece of access insulation. Press the second piece of access insulation flush over the first piece of access insulation. Compress and abut the cut edges of the first piece of the access insulation against the cut edges of opening in the insulation (Item 4). Cut a third piece of rectangular access insulation a minimum of 2 inches larger than the second piece of access insulation on all sides Seal cut edges of the third piece of access insulation with nominal 4-inch-wide aluminum foil tape. Position, square, and impale the third piece of the access insulation over the four (4), 3/8-inch diameter, all-thread, steel rods extending from pre-fabricated access door (Item 6A). Press the third piece of access insulation flush over second piece of access insulation.

C. COVER PLATE: Cut a cover plate to the same dimensions as the third piece of access insulation (Item 6B) using a minimum 16 GA steel sheet. Drill holes in the cover plate that match the location of the four (4), 3/8-inch diameter, all-thread, steel rods and locate the holes so that the cover plate is squared to the third piece of access insulation (Item 6B). After all three (3) layers of access insulation (Item 6B) are impaled over the four (4), 3/8-inch diameter, all-thread, steel rods install the cover plate. Pass the four (4), 3/8-inch diameter, all-thread, steel rods through the cover plate. Place washers and wing nuts onto each of the four (4), 3/8-inch diameter, all-thread, steel rods. Secure the cover plate by tightening wing nuts.

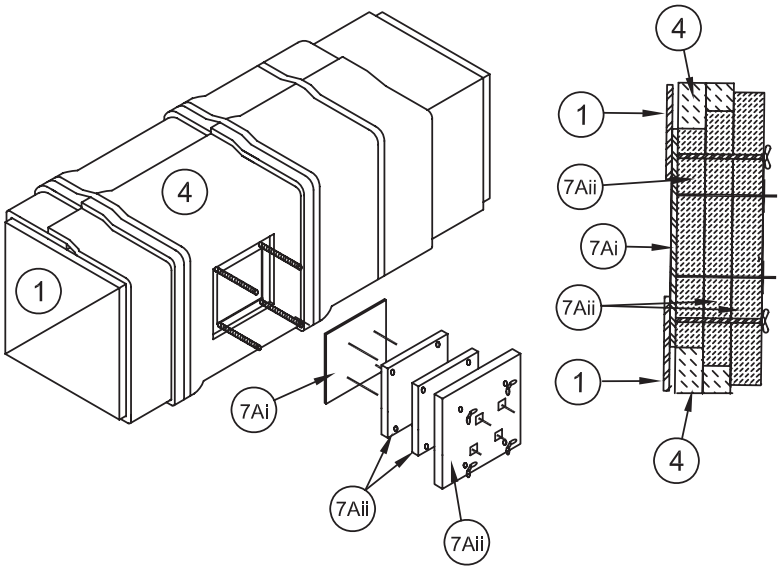

Figure 3 – Field Fabricated Access Door Option A

7. OPTIONAL FIELD-FABRICATED ACCESS DOORS: Mark a clean-out access opening location on the grease duct (Item 1) with insulation (Item 4) at its mid-height along the horizontal section. Use either Option A or B.

A. (OPTION A) Cut a 12x12-inch opening in the insulation (Item 4). Remove and discard the cut insulation (Item 4). Cut and center a 10x10-inch opening into the side of the grease duct (Item 1) by maintaining a 1-inch clearance between the perimeter of the opening and the cut insulation (Item 4). Remove and discard the cut steel. Weld four (4), minimum 4-inch long, 1/4-inch diameter, all-thread, steel

rods to the grease duct (Item 1). Locate one (1) steel rod at each corner of the grease duct (Item 1) opening so that they are 11 inches on center and squared within the insulation (Item 4) opening.

i. ACCESS DOOR: Cut a 12x12-inch, 16 GA, steel plate to be used as an access door. Drill clearance holes in the access door to match the all-thread, steel rod pattern. Place the access door over the all-thread, steel rods. Seal the opening in the grease duct (Item 1) by overlapping the access door over the opening cut in the insulation (Item 4) by 1 inch on all sides. Weld four (4), minimum 6-1/2-inch long, 12 GA, copper-coated, steel insulation pins to the access door corners so that the insulation pins are 9 inches on center.

ii. CERTIFIED MANUFACTURER: 3M Company

CERTIFIED PRODUCT: 3M Fire Barrier™ Duct Wrap

MODEL: 615+

ACCESS INSULATION: Apply three (3) layers of access insulation over the access door. Cut the first piece of access insulation into a 12x12-inch square and install it over the insulation pins and cover the access door (Item 7Ai). Cut the second piece of access insulation into a 14x14-inch square. Square it and install it over the insulation pins. Cover the first piece of access insulation so that a 1-inch overlap exists. Cut the third piece of access insulation into a 16x16-inch square. Square it and install it over the insulation pins. Cover the second piece of access insulation so that a 1-inch overlap exists. Secure access insulation to the insulation pins with 1-1/2-inch square or round, galvanized or stainless steel, speed clips. Turn down or cut off insulation pins that extend beyond the second piece of access insulation. Place maximum 4-inch long, steel tubing over each all-thread, steel rods. Apply washers and wing nuts over the all-thread, steel rods. Secure the access door by tightening the wing nuts.

B. (OPTION B) Cut a maximum 16x16-inch opening into the insulation (Item 4) and the grease duct (Item 1). Remove and discard the cut insulation (Item 4) and steel. Weld together four (4) pieces of 1-1/2 x 1-1/4 x 1/8-inch steel angle, with the flange outward, to form a 1-1/2-inch tall, flanged frame. Position, center, and continuously weld the flanged frame around the opening in the grease duct (Item 1). Position one (1), minimum 4-inch long, 1/4-inch diameter, all-thread, steel rod in the center of each of the four (4) corners of the flange and weld them in place.

i. ACCESS DOOR: Cut an 18-1/2 x 18-1/2-inch, 16 GA, steel plate to be used as an access door. Drill clearance holes in the access door to match the all-thread, steel rod pattern on the flange. Place the access door over the all-thread, steel rods.

ii. COVER PLATE: Cut a 20-1/2 x 20-1/2-inch external cover plate out of 16 GA steel sheet and drill clearance holes matching the locations of the all-thread, steel rods on the flange. Weld minimum four (4), 12 GA, copper-coated, steel insulation pins onto the internal surface of the cover plate, spaced minimum 14 inches on center. Limit insulation pin length to one-half total access insulation thickness. Install access insulation (Item7Biii). Position the cover plate with access insulation over the all-thread, steel rods flush to access door. Apply washers and wing nuts over the all-thread, steel rods. Secure the access door by tightening the wing nuts.

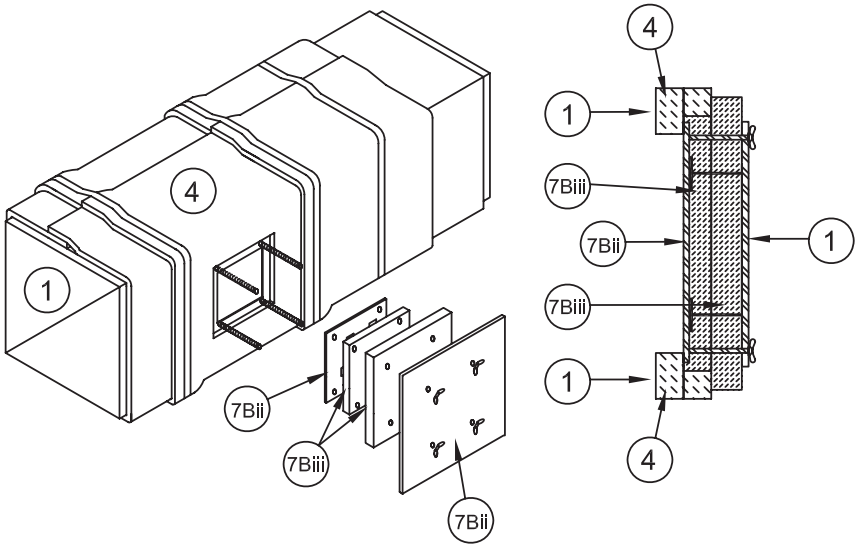

Figure 4 – Field Fabricated Access Door Option B

iii. CERTIFIED MANUFACTURER: 3M Company

CERTIFIED PRODUCT: 3M Fire Barrier™ Duct Wrap

MODEL: 615+

ACCESS INSULATION: Apply two layers of access insulation over the interior of the cover plate. Cut the first piece of access insulation into a 20-1/2 x 20-1/2-inch square and install it over the insulation pins on the internal surface of the cover plate. Cut the second piece of access insulation into a 24 x 24-inch square. Square it to and install it over the insulation pins. Cover the first piece of access insulation so that a 1-3/4-inch overlap exists. Secure access insulation to insulation pins with 1-1/2-inch square or round, galvanized or stainless steel speed clips. Turn down or cut off insulation pins that extend beyond the second piece of access insulation.

8. NONCOMBUSTBLE[2] SUPPORTING CONSTRUCTION: Refer to Figures 3 and 4. Use one of the following wall or floor assemblies.

A. GYPSUM WALL ASSEMBLY: Symmetrical two-hour rated gypsum wall assembly constructed of the following:

i. Steel Studs – Minimum 25 GA galvanized steel studs measuring 3-5/8 inch wide with 1-1/4-inch legs spaced maximum 24 inch on center (O.C.). Attach studs with minimum #6 x 3/8-inch steel stud framing screws to floor and ceiling tracks.

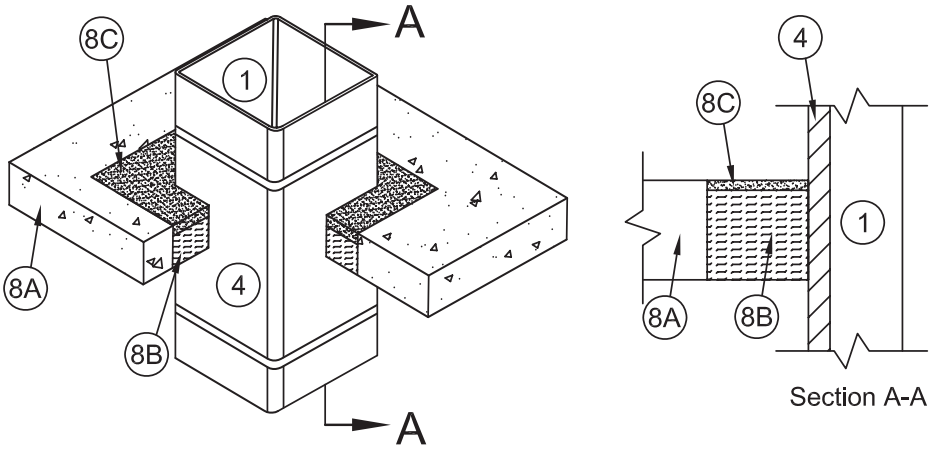

Figure 5 – Noncombustible Supporting Constructions

ii. Tracks – Channel U-shaped floor and ceiling runners measuring 1/2-inch deep by 3-5/8-inch wide, which are secured to floor and ceiling with 1-inch long fasteners suitable for the mounting to substrate and spaced maximum 18-inch O.C.

iii. Gypsum Board – Cover studs and runners with two layers of 5/8 inch thick, Type X gypsum board on each face. Fasten base layer of gypsum board to steel studs with #6 1-1/8 inch bugle head phillips drywall screws spaced maximum 12 inch O.C. Fasten face layer of gypsum board with #6, 1-5/8 inch long bugle phillips drywall screws spaced maximum 8 inches O.C. Apply vinyl or casein, dry or premixed joint compound to face layers of gypsum board in two coats to all exposed screw heads and gypsum board joints. Embed minimum 2 inch wide paper, plastic or fiberglass tape in first layer of joint compound over joints in gypsum board. Minimum wall assembly thickness of 6 inches measured from face layer of gypsum board to opposite face layer of gypsum board.

B. SHAFT WALL ASSEMBLY:

Asymmetrical two-hour rated gypsum shaft wall assembly constructed of the following:

i. Visual Gypsum Board – Cover studs and runners with two layers of minimum 1/2 inch thick, Type X gypsum board on each face. Fasten base layer of gypsum board to steel studs with #6 1-1/8 inch bugle head phillips drywall screws spaced maximum 12 inch O.C. Fasten face layer of gypsum board with #6, 1-5/8 inch long bugle phillips drywall screws spaced maximum 8 inches O.C. Apply vinyl or casein, dry or premixed joint compound to face layers of gypsum board in two coats to all exposed screw heads and gypsum board joints. Embed minimum 2 inch wide paper, plastic or fiberglass tape in first layer of joint compound over joints in gypsum board. Minimum wall assembly thickness of 4-1/2 inches measured from face layer of gypsum board to opposite face layer of gypsum board.

ii. Interior Gypsum Board – Cut 1-inch thick Type X gypsum board 1-inch less than floor to ceiling height. Insert the longitudinal edges of the 1-inch thick Type X gypsum board into the C-T or C-H studs. Secure the transverse edge of the 1-inch thick Type X gypsum board to the long leg of J-runner using its tabs or minimum 1-5/8-inch long Type S self-tapping bugle head steel screws spaced maximum 12 inches on center.

iii. Steel Studs – Cut minimum 25 GA galvanized steel C-T or C-H studs measuring minimum 2-1/2 inches wide with minimum 1-1/2-inch flanges 3/4-inches less than floor to ceiling height and spaced maximum 24 inch on center (O.C.) in runners with T or H section abutting long leg of runner.

iv. Runners – Use minimum 2-1/2- inch wide J-runner compatible with studs and having unequal vertical legs: minimum 1-inch short leg and minimum 2-inch long leg. Position J-runners with short leg towards visual face of shaft wall. Attach to floor and ceiling using steel fasteners located a maximum of 2-inches from each end and a maximum of 24 inch O.C.

C. CONCRETE WALL ASSEMBLY: Symmetrical, two-hour rated, solid concrete, wall assembly made from reinforced lightweight or normal weight (100-150 pcf or 1600-2400 kg/m^3) concrete, which may also be used as a shaft wall assembly. Constructed of solid concrete with a minimum concrete thickness measured from exposed face to exposed face using one of the following:

i. lightweight concrete is 3.6 inches;

ii. sand-lightweight concrete is 3.8 inches;

iii. carbonate aggregate concrete is 4.6 inches; and

iv. siliceous aggregate concrete is 5.0 inches.

D. MASONRY WALL ASSEMBLY: Symmetrical, two-hour rated, nominal 8 x 8 x 16 CMU, wall assembly made from lightweight or normal weight (100-150 pcf or 1600-2400 kg/m^3) concrete, which may also be used as a shaft wall assembly.

E. CONCRETE FLOOR ASSEMBLY: Symmetrical two-hour rated solid concrete floor assembly made from reinforced lightweight or normal weight (100-150 pcf or 1600-2400 kg/m^3) concrete. Constructed of solid concrete with a minimum concrete thickness measured from exposed face to exposed face using one of the following:

i. lightweight concrete is 3.6 inches;

ii. sand-lightweight concrete is 3.8 inches;

iii. carbonate aggregate concrete is 4.6 inches; and

iv. siliceous aggregate concrete is 5.0 inches

[2] Refers to building construction referenced in the building codes.

9. OPENING – Create an opening in the assembly. Position the grease duct (Item 1) concentrically or eccentrically in the opening so that the annular space ranges from minimum 0.5 inch to maximum 4-1/2 inches. Establish an opening designed to house the grease duct (Item 1) covered with insulation (Item 4) and the desired annular space but not exceeding a cross-sectional area of maximum 3136 inch^2 and a maximum dimension of 59.5 inches

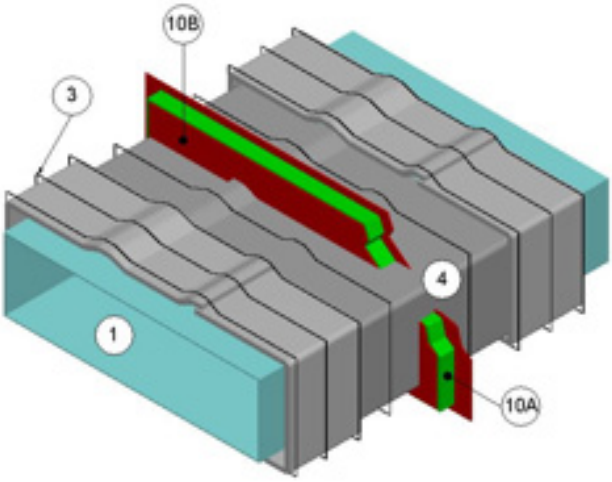

Symmetrical Firestops for Horizontal Grease Ducts
with Insulation Through Noncombustible Wall Assemblies

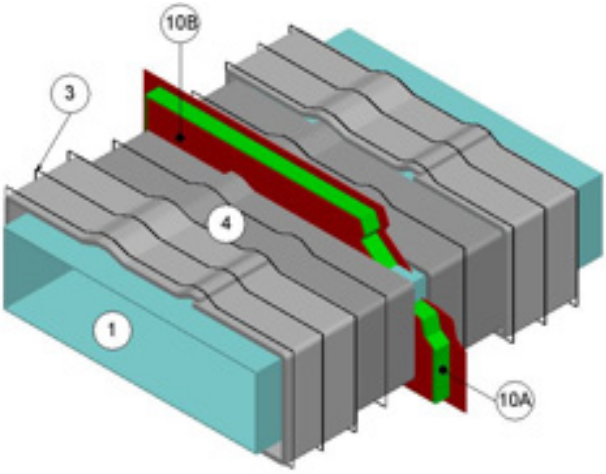

Symmetrical Firestops for Horizontal Grease Ducts
without Insulation Through Noncombustible Wall Assemblies

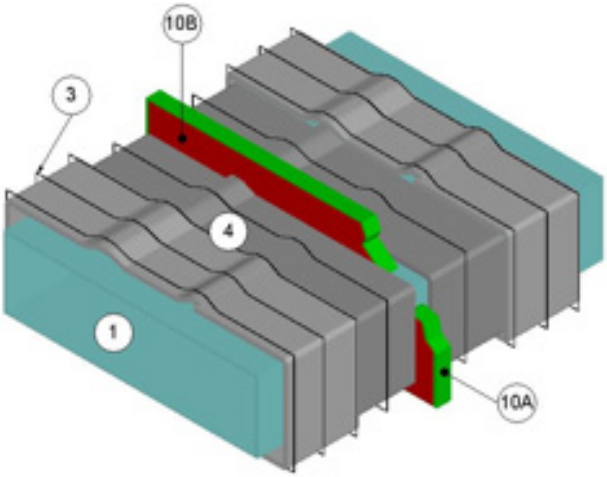

Asymmetrical Firestops for Horizontal Grease Ducts
without Insulation Through Noncombustible Shaft Assemblies

DESIGN NO. 3MU/FRD 120-18 *continued*

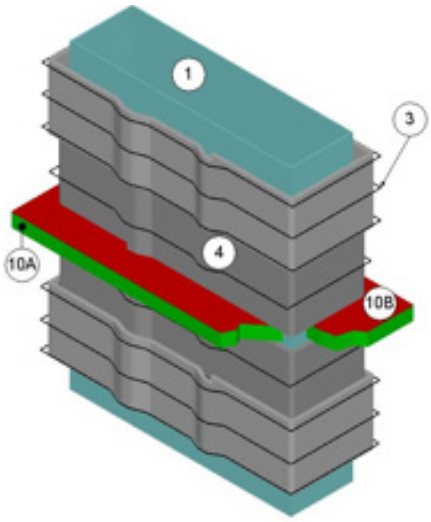

Asymmetrical Firestops for Vertical Grease Ducts without Insulation Through Noncombustible Floor Assemblies

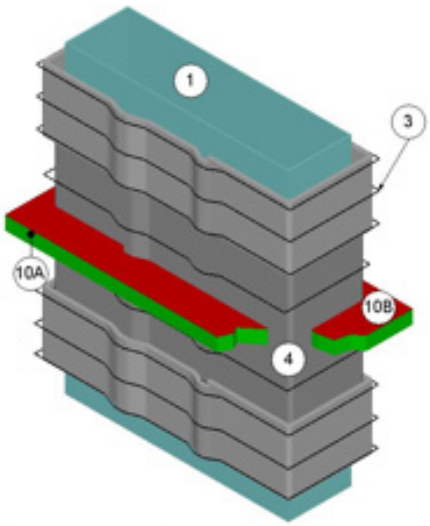

Asymmetrical Firestops for Vertical Grease Ducts with Insulation Through Noncombustible Floor Assemblies

Figure 6 – Penetration Firestops for Noncombustible Supporting Constructions

10. PENETRATION FIRESTOP: Install two-hour, fire-resistant, ASTM E 814, firestop system. Install firestop between the supporting construction (Item 6) and the grease duct (Item 1) or the grease duct (Item 1) protected with the insulation (Item 4). Use a symmetrical wall penetration firestop, an asymmetrical shaft penetration firestop, or an asymmetrical floor penetration firestop constructed of the following components.

    A. CERTIFIED MANUFACTURER: 3M Company

    CERTIFIED PRODUCT: 3M Fire Barrier™ Duct Wrap

    MODEL: 615+

    PACKING MATERIAL: Fill the entire annular space's width with minimum 4-pcf density mineral wool or certified insulation without the encapsulation (foil scrim).

    Cut the packing material into strips not less than one and one half (1-1/2) times the width of the annular space to be filled. Compress packing material nominally 33% and insert packing material into the annual space.

    For wall assemblies, recess the surface of packing material nominally 5/8 inches from surfaces of both faces of the supporting construction (Item 8).

    For floor assemblies, recess the surface of packing material nominally 5/8 inches from the visual surface of the supporting construction (Items 8) and install a minimum depth of 4-inches.

    B. CERTIFIED MANUFACTURER: 3M Company

    CERTIFIED PRODUCT: 3M™ Fire Barrier™ Sealant

    MODEL: Water-Tight 1000-NS Silicone, 1003-SL Silicone (Floor Assembly Only), 2000+ Silicone, or CP 25 WB+

    FILL, VOID OR CAVITY MATERIAL:

    Install minimum 5/8-inch depth of fill material into the recess over the entire surface of the packing material (Item 7A). Screed the fill material flush with the surface of the supporting construction (Item 8). Overlap a minimum of 1/4 inches, the fill material onto face of supporting construction (Item 8).

This material was extracted and drawn by 3M Fire Protection Products from the 2012 Product Directory, © Intertek