3M™ Stretchable Tape Load Containment System

1 Typical film

2 Scotch® Stretchable Tape

The system that proves less is more.

Reducing waste and meeting sustainability goals are growing priorities for manufacturers and shippers around the globe. The 3M™ Stretchable Tape Load Containment System can reduce pallet packaging waste by up to 95%, while keeping your loads from tipping, shifting and vibrating. The result: Less waste, more stability and greater productivity, as well.

3M™ Stretchable Tape Wrapper ST1000

- Automated wrapping ensures proper stretch ratio and consistent banding patterns, optimizing load stability.
- Programmable system can customize each pallet by box height, number of layers, load dimensions, wrapping pattern and more.
- Unique approach to load containment—taping over pallet corners and top corners—reduces load vibration and stack resonance.
- Open containment pattern secures loads while maximizing ventilation.
- Integrated turntable automatically adjusts speed and returns to starting position when finished.
- 8.5´ max wrapping height and 4,400 lb. capacity meet the vast majority of shipping requirements.

Programmable control panel allows easy pattern customization. Touch pad buttons store 10 frequently used patterns into memory.

Gets stronger as you stretch it.

5 6

Scotch® Stretchable Tape 8886

7

- Cuts pallet packaging waste by up to 95% over conventional film systems.
- Solventless adhesive coating process helps meet your sustainability goals.
- Strong-but-gentle performance holds loads secure while keeping even corrugate from becoming damaged—reuse more of your boxes!
- Unstretched tape has enough adhesive to stick on contact to corrugate for easy starting: Simply stick tape on starting point and wrapper automatically finishes the job.
- Tensile strength increases to 40 lbs. per inch when tape is stretched to 650%. When tension is released, elastic memory continues to tighten the load—without crushing your boxes. The result is a secure, undamaged load.
- Graphics-friendly tape removes easily and quickly after delivery, without delaminating or damaging graphics.

To learn more about 3M's complete line of packaging innovations, go to 3M.com/packaging.

4

The 3M™ Stretchable Tape Load Containment System keeps loads from tipping, shifting and vibrating—while dramatically reducing pallet packaging waste.

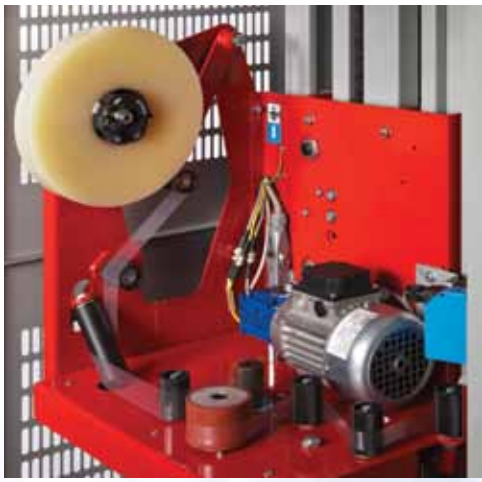

8

Tape head automatically pre-stretches tape and maintains optimal tension while wrapping pallet from top to bottom.

3M™ Stretchable Tape Load Containment System

Specifications:

3M™ Stretchable Tape Wrapper ST1000

Power: 115/230 Volts, 50/60 Hz, 12.6/6.3 Amps, 1450 Watts

Operating rate: 20–30 pallets/hr average, depending on wrapping pattern

Operating conditions: dry indoor environment

Load capacity: 4,400 lbs.

Wrapping height: up to 8.5´

Mast height: 10´ 3˝ (assembly required to attach to base)

Load: best used with "A" and "B" loads with less than 3˝ overhang

Turntable diameter: 5.4´, integrated

Finish: powder coated for durability

Footprint:
3M™ Stretchable Tape Wrapper ST1000

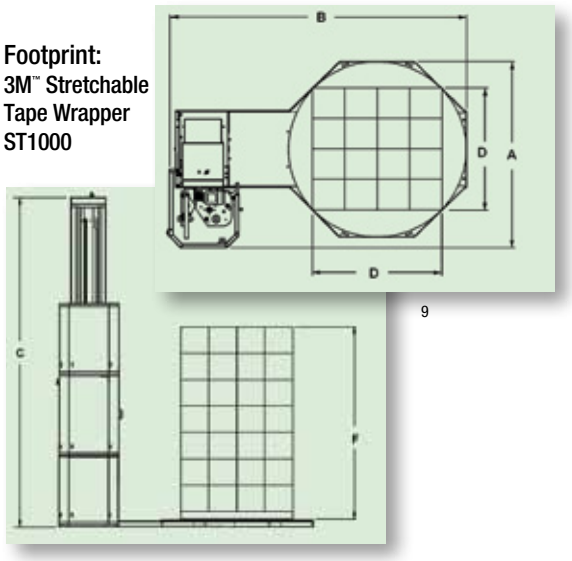

9

3M™ Stretchable Tape Wrapper ST1000

Machine	Machine Weight Crated lbs (kg)	Machine Dimensions inches (mm)			Pallet Dimensions inches (mm)	
		Base Width A	Base Length B	Base Height C	Width D	Height F
ST1000	1,500 (682)	64.75 (1645)	106.3 (2700)	123.4 (3134)	48 (1219)	102.4 (2600)

Scotch® Stretchable Tape 8886

Tape	Backing Color	Backing	Adhesive	Elongation at Break %	Tensile* at Break Point (lb/in)	Adhesion (oz/in)	Total Thickness (mils)
8886	Clear	Linear Low Density Polyethylene	Synthetic Rubber Resin	720	40	56	7

*Tensile per ASTM 3579 based on 36mm tape width.

Note: This technical information and data should be considered representative or typical only and should not be used for specification purposes.

Approximate yield per 500 meter roll stretched—3,250 meters
Approximate tape weight per 500 meter roll—105 oz.
Rolls per case—6

PRODUCT USE: All statements, technical information and recommendations contained in this document are based upon tests or experience that 3M believes are reliable. However, many factors beyond 3M's control can affect the use and performance of a 3M product in a particular application, including the conditions under which the product is used and the time and environmental conditions in which the product is expected to perform. Since these factors are uniquely within the user's knowledge and control, it is essential that the user evaluate the 3M product to determine whether it is fit for a particular purpose and suitable for the user's method of application.

WARRANTY AND LIMITED REMEDY: Unless stated otherwise in 3M's product literature, packaging inserts or product packaging for individual products, 3M warrants that each 3M product meets the applicable specifications at the time 3M ships the product. Individual products may have additional or different warranties as stated on product literature, package inserts or product packages. 3M MAKES NO OTHER WARRANTIES, EXPRESS OR IMPLIED, INCLUDING, BUT NOT LIMITED TO, ANY IMPLIED WARRANTY OF MERCHANTABILITY OR FITNESS FOR A PARTICULAR PURPOSE OR ANY IMPLIED WARRANTY ARISING OUT OF A COURSE OF DEALING, CUSTOM OR USAGE OF TRADE. User is responsible for determining whether the 3M product is fit for a particular purpose and suitable for user's application. If the 3M product is defective within the warranty period, your exclusive remedy and 3M's and seller's sole obligation will be, at 3M's option, to replace the product or refund the purchase price.

LIMITATION OF LIABILITY: Except where prohibited by law, 3M and seller will not be liable for any loss or damage arising from the 3M product, whether direct, indirect, special, incidental or consequential, regardless of the legal theory asserted, including warranty, contract, negligence or strict liability.

3M

Industrial Adhesives and Tapes Division
Building 225-3S-06
St. Paul, MN 55144-1000
1-800-362-3550
www.3M.com/packaging

3M is a trademark of 3M.
Scotch is a registered trademark of 3M.
Please recycle. Printed in USA.
© 3M 2010. All rights reserved.

70-0710-0328-2