3M ESPE

Automatic Mixing Unit

Technical Product Profile

Pentamix™ 2

Table of Contents

Preface 5
Introduction 6
History 6
Motivation 7
Indications 8
Technical Background 9
Equipment Concept 9
Mixing Principle 9
New Pentamix™ System Components 10
Technical Data 12
Test Results 13
Filling Times 13
Dispensing Forces 13
Mixing Quality 14
Summary 16
Instructions for Use 17
Operating Instructions 26
3M™ ESPE™ PentaMatic™ 28
Preparing the 3M™ ESPE™ Penta™ Materials 28
Preparing of the 3M™ ESPE™ Pentamix™ 2 29
Frequently Asked Questions 30
Packaging Types 31
Bibliography 32

Preface

Precision impression materials based on polyether and polyvinyl siloxane are available as 2-component systems. The components are referred to as base paste and catalyst paste (also known as initiator paste in the case of polyether). The base paste and catalyst paste have to be mixed together before the impression is taken. Exact dispensing and thorough, homogeneous mixing of the materials are fundamental requirements for taking successful precision impressions.
The mixing system has the following characteristics:

- precise dosing
- homogeneous and void-free mixing
- standardized, consistently reproducible mixing quality
- easy handling and fast working
- precise and reliable timing
- hygienic and clean
- material saving due to exact dispensing
- fully automatic opening due to 3M™ ESPE™ PentaMatic™ foil bags

The 3M ESPE Pentamix™ 2 Automatic Mixing Unit offers all the above possibilities. It is the successor to the Pentamix™ Automatic Mixing Unit and represents a further advancement, especially with regard to effective and economical working. In addition to the points mentioned above, greater efficiency is also provided by the higher mixing speed, which almost halves the filling time for the impression tray and syringe compared to the first Pentamix Automatic Mixing Unit.
Not only the Pentamix unit itself but also the Pentamix system components (i.e. the Penta™ foil bags, Penta cartridges and Penta mixing tips) are continuously improved to increase the reliability of the overall Penta System. The following pages give you more background information about the Pentamix 2 Automatic Mixing Unit and its improved system components.

Introduction

History

For some time, users had been demanding an automatic mixing system for the polyethers 3M™ ESPE™ Impregum™ F and 3M™ ESPE™ Permadyne™. At the end of the 1980s 3M ESPE began working intensively on the problem of automatic mixing and how it was technically feasible.
After comprehensive tests with different prototypes, the 3M™ ESPE™ Pentamix™ Automatic Mixing Units entered full-scale production. The name Pentamix is derived from the Greek word for five (pente), reflecting the mix ratio of base paste to catalyst paste, namely 5:1.

The History of the Pentamix system development is summarized below:

June 1993	3M ESPE presents the Pentamix Automatic Mixing Unit for 3M™ ESPE™ Impregum™ Penta™ Polyether Impression Material at the Dental Fair in Switzerland.
April 1994	The Pentamix Automatic Mixing Unit in conjunction with Impregum Penta Polyether Impression Material is launched worldwide.
June 1994	3M™ ESPE™ Permadyne™ Penta™ H Polyether Impression Material is added to the 3M ESPE Penta™ product range.
April 1995	In response to market demand, 3M™ ESPE™ Permadyne™ Penta™ L Polyether Impression Material and 3M™ ESPE™ Ramitec™ Penta™ Polyether Impression Material are added to the Penta product range.
April 1996	The next additions to meet user demand are the Vinyl Polysiloxane (VPS) Impression Materials 3M™ ESPE™ Dimension™ Penta™ H and 3M™ ESPE™ Dimension™ Garant™ L.
April 1997	3M ESPE responds to market demand for more materials that can be mixed in the Pentamix by launching 3M™ ESPE™ Dimension™ Penta™ H Quick Vinyl Polysiloxane Impression Material and 3M™ ESPE™ Dimension™ Penta™ L Vinyl Polysiloxane Impression Material .
Sep. 1997	3M ESPE introduces the innovative VPS for all alginate indications, 3M™ ESPE™ Position™ Penta™ and 3M™ ESPE™ Position™ Penta™ Quick.
March 1999	Launch of 3M™ ESPE™ Pentamix™ 2 Automatic Mixing Unit, the faster model of the worldwide sucessful Pentamix.
Sep. 2000	International start of sale of 3M™ ESPE™ Impregum™ Penta™ Soft Polyether Impression Material, the polyether for monophase technique. At the same time 3M ESPE PentaMatic™, the first Auto-Open-System for all 3M ESPE Penta™ foil bags was presented.
Sep. 2001	3M ESPE adds 3M™ ESPE™ Impregum™ Penta™ DuoSoft™ Polyether Impression Material for the one-step tray wash technique to the soft product range.

Sep. 2004 3M ESPE introduces 3M™ ESPE™ Express™ Penta™ Putty, the first 3M ESPE VPS with real putty consistency available for automated mixing in the Pentamix™ Automatic Mixing Unit. Express Penta Putty comes with 3 new Pentamix system components (new Penta™ mixing tip Red, new steel-reinforced Penta cartridge, reinforced foil bags)

April 2005 Launch of the fast setting versions of the Impregum Soft Polyether Impression Material product family: 3M™ ESPE™ Impregum™ Penta™ Soft Quick Polyether Impression Material and 3M™ ESPE™ Impregum™ Penta™ H DuoSoft™ Quick Polyether Impression Material. Adaption of all existing Penta materials to the 3 new Penta system components.

The Pentamix system now comprises materials covering all indications and techniques for precision impressions including occlusal registration and alginate indications.

Figure 2: The Pentamix™ 2 Product Portfolio

Motivation

The high level of acceptance of the Pentamix system, together with permanent contact between 3M ESPE and its customers, led first of all to an expansion of the Penta™ product family. However, through this dialogue, 3M ESPE also became aware that many users wanted a faster mixing unit. This wish has been met with the Pentamix 2 Mixing Unit. The last update to the Pentamix system focused on its system components Penta mixing tip, Penta cartridge and Penta foil bag with the goal to generally increase the quality and reliability of the Pentamix system. In addition, the Penta product range was extended to include the putty material segment. This way dentists using putty materials can now also benefit from the advantages of the Pentamix system. The improved system components are the new Penta mixing tip red, the new steel reinforced Penta cartridge and the new reinforced front caps for the foil bags.

Indications

The 3M™ ESPE™ Pentamix™ system comprises materials, covering all impression techniques and virtually all indications (refer to the indication table below).

Penta™ Impression Materials for Each Indication and Each Technique

Material Class	Impression Technique	Impression Material	Crown- and bridge Impressions	Inlay-/Onlay Impressions	Fixation Impressions	Implant Impressions	Functional Impressions	Impressions for making temp. restorations	Impressions for study models	Impressions for opposing models	Bite registration
Polyether "New Generation"	Monophase technique	Impregum™ Penta™ Soft	●	●	●	●	●				
Polyether "New Generation"	Monophase technique	Impregum™ Penta™ Soft Quick	●	●	●	●					
Polyether	Monophase technique	Impregum™ Penta™	●	●	●	●	●				
Polyether "New Generation"	One-step/ tray-wash technique	Impregum™ Penta™ H DuoSoft™ with Impregum™ Penta™ L DuoSoft™ or Impregum™ Garant™ L DuoSoft™	●	●			●				
Polyether "New Generation"	One-step/ tray-wash technique	Impregum™ Penta™ H DuoSoft™ Quick with Impregum™ Penta™ L DuoSoft™ Quick or Impregum™ L DuoSoft™ Quick	●	●							
Polyether	One-step/ tray-wash technique	Permadyne™ Penta™ H with Permadyne™ Penta™ L or Permadyne™ Garant™ 2:1	●	●			●				
Polyether	Bite Registration	Ramitec™ Penta™									●
VPS	Two-step putty/ One-step/ putty wash technique	Express™ Penta™ Putty with Express™ Ultra-Light Body or Express™ light body fast set (blue)	●	●							
VPS	One-step/ tray-wash technique	Express™ Penta™ H with Express™ light body regular set (green) or Express™ regular body regular set (purple)	●	●							
VPS	Two-step/ tray-wash technique	Express™ Penta™ H Quick with Express™ light body fast set (blue) or Express™ light body regular set (green)	●	●							
VPS	Alginate Indications	Position™ Penta™ or Position™ Penta™ Quick						●	●	●	

Technical Background

Equipment Concept

The 3M™ ESPE™ Pentamix™ 2 Automatic Mixing Unit essentially consists of three components:

- Drive unit with motors, clutch and gears
- Dispensing unit consisting of chain, cross-member, double plunger and piston discs
- Superstructure with frame, side sections made of die-cast aluminum and polycarbonate housing

The clutch is a particularly important component. It is responsible for transmitting the enormously high torque levels, while at the same time acting as an overload safety device.
It must disengage the drive unit reliably from the dispensing unit when the material in the foil bag has been used up.
The clutch also provides defined, delayed disengaging each time dispensing finishes in order to prevent the pastes from dripping.
The Pentamix Automatic Mixing Unit is suitable for either tabletop use or wall mounting.

Mixing Principle

In the case of the static mixing tips for dispenser cartridges, the base and catalyst pastes are mixed by the spiral-shaped interior of the mixing tip as the material is dispensed. In contrast to this, the mixing spiral in the mixing tip of 3M ESPE Pentamix 2 Automatic Mixing Unit is driven by a separate motor via a shaft. In other words, Pentamix 2 is a dynamic mixer. Static mixing is based on the principle of subdivision of the material strand as it passes over the surfaces of the spiral-shaped interior of the mixing tip. Thus, the strand emerging from the mixing tip is made up of a very large number of individual strands of base paste and catalyst. This type of mixing is adequate for most materials to achieve complete curing, but one cannot assume that the materials have been completely mixed.
In dynamic mixing, the rotation of the mixing spiral in conjunction with the forward feed movement generates a turbulent flow which produces complete mixing of the material.

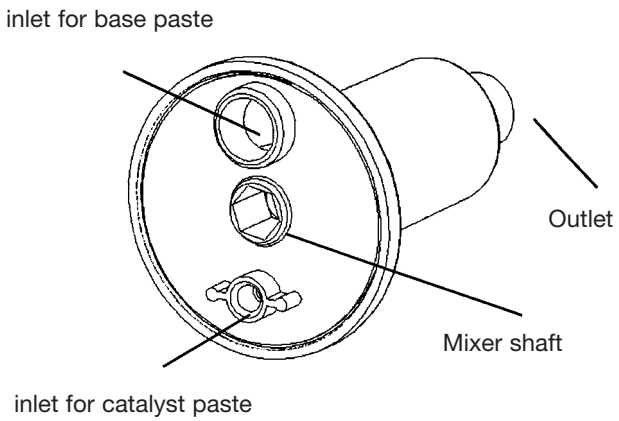

Figure 1: Mixing Tip Red for the Pentamix™ 2 Automatic Mixing Unit.

Another advantage of this principle is that it also allows highly viscous materials to be mixed automatically. In a static system, the energy required would cause a sharp rise in the temperature of the impression material, whereas with dynamic mixing there is no significant increase in temperature in the mixer. In this way the full working time is maintained and, in addition, reproducible, uniform and void-free mixing is ensured.

New Pentamix™ System Components

The latest improvement of the Pentamix System focused on the redesign of the 3 Penta™ system components Penta mixing tip, Penta cartridge and Penta foil bag. The outcome of this redesign are components which greatly enhance the robustness and reliability of the entire Pentamix system. The new system components now also enable the Pentamix system to dispense materials with a high viscosity like putty materials and fast setting polyethers.

Penta™ Mixing Tip Red

Figure 3: Penta™ Mixing Tip Red

The new mixing tip red reduces extrusion forces up to 50% due to its optimized inside flow geometry compared to the former mixing tip.

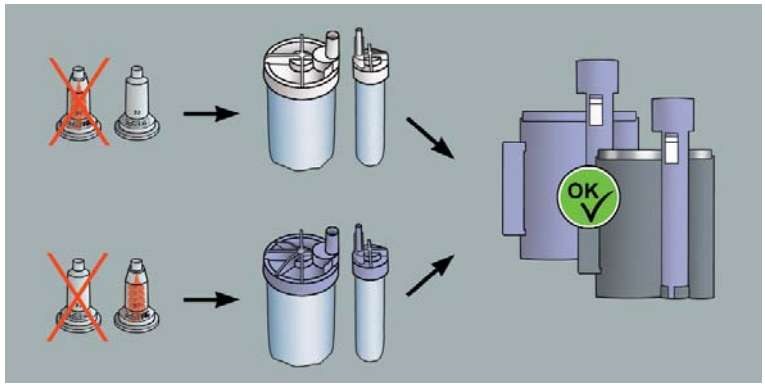

Figure 4: Packaging Insert

The new mixing tip red is to be used with the new foil bags (with colored front caps). Due to its special geometry it cannot be mounted onto the old foil bags (with white front caps). Also, the old Penta mixing tips (white) cannot be mounted onto the new colored foil bag caps (see figure). The purpose of this development is to prevent possible mistakes during application resulting from combining old and new system components.

Colored, reinforced front caps

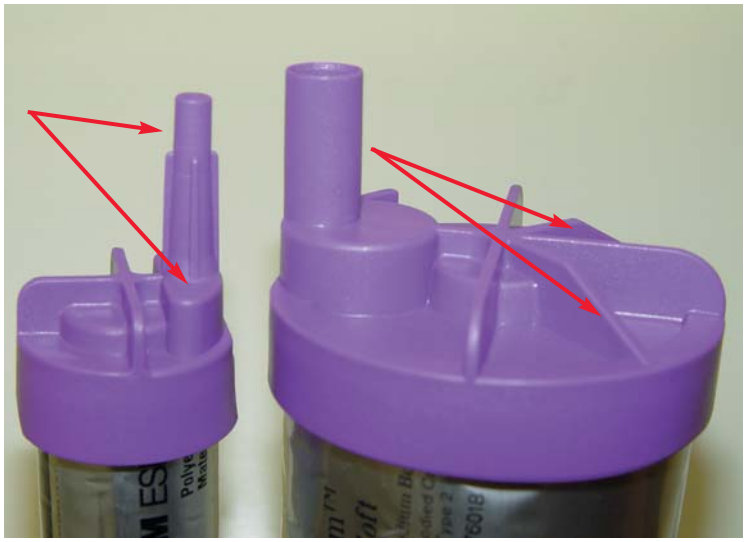

Figure 5: New front cap design with reinforcement struts (marked by arrows)

The outlet of the catalyst paste has been adapted to the special material properties of the different materials and was reinforced with plastic struts. The cap of the base paste was reinforced with struts as well (see arrows in Fig. 5). This way the stability of the caps is increased further minimizing the risk of cap breaking.

Steel reinforced cartridge with new color coding

Figure 6: The new cartridge is made of grey plastic coated steel tubes. The locking levers have the colors associated to the different impressioning materials.

Due to its steel inner tubes the new cartridge is much stronger compared with the former one. It thus offers excellent protection from breakage. The color coding of the foil bags and cartridges was changed from white front caps and colored cartridges and locking levers to uniformly grey cartridges with color coded locking levers and color coded front caps. This way confusions by placing a foil bag in a wrongly colored cartridge can be excluded.

Technical Data

The following table summarises the most important technical data.

Pentamix™ 2	Technical Data
Mains voltage	230 V/ 50 Hz (internat. version) 120 V/ 60 Hz (US version) 100 V/ 60 Hz or 50 Hz (Japanese version) 230 V/ 60 Hz (Korean, Saudi Arabian version)
Power consumption	1.5 A (internat. Version) 3 A (US and Japanese version)
Rate of cross-member feed	22.5 mm/min
Gear ratio	50 Hz main voltage => 1630:1 60 Hz main voltage => 1950:1
Mixer shaft speed	375 rpm
Rate of dispensing (depending on the material)	85 ml/min (Impregum™ Penta™ Soft Quick)

Test Results

Filling Times

In comparison to 3M™ ESPE™ Pentamix™ Automatic Mixing Unit, the dispensing time in particular has been shortened with 3M™ ESPE™ Pentamix™ 2 Automatic Mixing Unit. Dispensing speed is 1.5 times higher compared with the first-generation Pentamix Automatic Mixing Unit. Together with the shorter lead time, this means that the filling time has been almost halved. Examples of filling times for standard metal upper and lower trays are shown below:

Metal tray used	Pentamix™	Pentamix™ 2
Upper Tray	65 Sec.	35 Sec.
Lower Tray	65 Sec:	35 Sec.

The shorter filling time essentially offers two fundamental advantages:

- The shorter dispensing and mixing times mean that more time is left for taking the impression. This is particularly apparent with the Quick variants or fast-setting materials, for which halving the filling time significantly extends the working time available to the dentist. For relatively large impressions or in hot climates, this is an important advantage.
- Parallel filling of the tray and elastomer syringe is significantly more efficient, which allows for even easier handling.

Dispensing Forces

The new system components reduce the dispensing forces up to 50% depending on the material.

Comparison of Dispensing forces

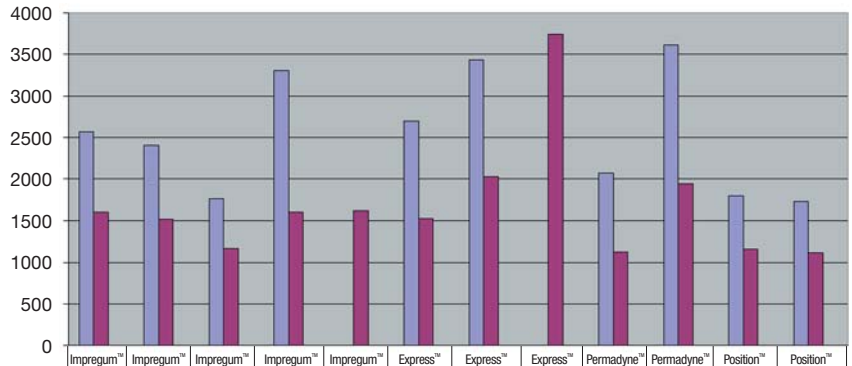

	Impregum™ Penta™	Impregum™ Penta™ Soft	Impregum™ Penta™ L DuoSoft™	Impregum™ Penta™ H DuoSoft™	Impregum™ Penta™ H Duo-Soft™ Quick	Express™ Penta™ H	Express™ Penta™ H Quick	Express™ Penta™ Putty	Permadyne™ Penta™ L	Permadyne™ Penta™ H	Position™ Penta™	Position™ Penta™ Quick
Penta™ Mixing Tip	2564	2407	1768	3309	0	2694	3433	0	2071	3613	1800	1736
Penta™ Mixing Tip Red	1602	1522	1169	1602	1622	1526	2025	3745	1128	1941	1160	1116
Force reduction	-37,5%	-36,8%	-33,9%	-51,6%	0,0%	-43,4%	-41,0%	0,0%	-45,5%	-46,3%	-35,6%	-35,7%

Figure 7: Dispensing forces for the Penta™ Materials using the old components vs. the new Penta™ Mixing Tip Red and the new front cap.

Also the new material Express™ Penta™ Putty Vinyl Polysiloxane Impression Material with putty-consistency is below the maximal force of 4000 N recommended for the Pentamix 2 Automatic Mixing Unit and in the range of materials of the former system.

Mixing Quality

Polyether

The advantages of automatic mixing, as compared with hand mixing, have been described by Pospiech and Wildenhain in their article, “On the Subject of Mixing Polyether Impression Materials”, [Dental Spiegel 5/98] and are briefly mentioned here.

The tests demonstrated that air voids of varying sizes in the macroscopically visible range were found in all the hand-mixed test specimens. If such voids occur in the area of the occlusal surfaces or the prepared abutment teeth, the result may be inaccuracies which put the success of the work in doubt. In the test specimens mixed with the 3M™ ESPE™ Pentamix™ 2 Automatic Mixing Unit, virtually no air voids were detected, as can be seen in the box plot diagram and illustrations below (Fig. 12).

For everyday work in the dental surgery this means that by using the dynamic mixing system it is possible to achieve somewhat less luck of the draw and more controlled quality at a decisive stage of restorative work.

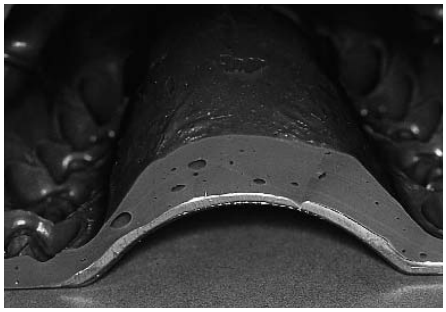

Figure 8: Example of an impression taken with hand-mixed impression material. If such voids occur in the area of the occlusal surfaces or the prepared abutment teeth, the result may be inaccuracies which jeopardise the success of the work.

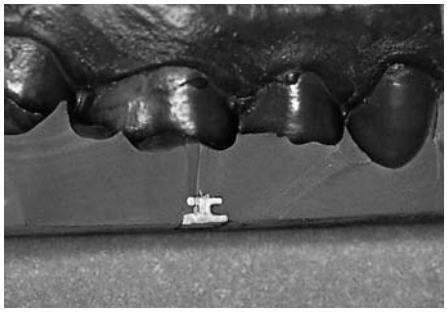

Figure 9: Example of an impression with Pentamix™ Automatic Mixing Unit mixing: absolutely void-free, homogeneous impression

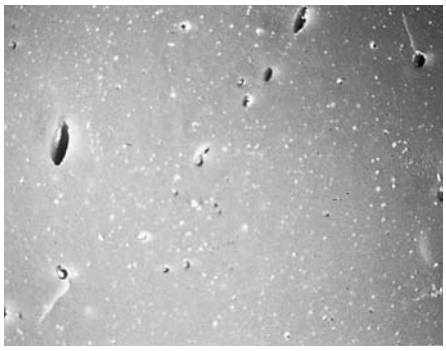

Figure 10: Test specimen with hand-mixed Impregum™ Polyether Impression Material: 10-fold magnification

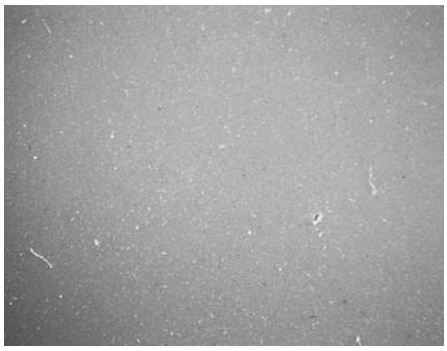

Figure 11: Test sprecimen of Impregum™ Polyether Impression Material mixed with the Pentamix™ Automatic Mixing Unit: 10-fold magnification

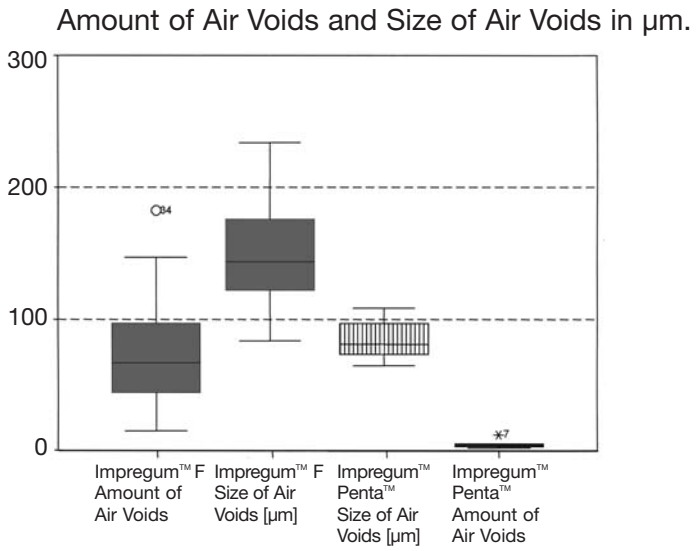

Figure 12: Boxplot diagram

Comparative presentation of results for number and diameter of air voids in hand-mixed and mechanically mixed Impregum™ Polyether Impression Material.

A-Silicones

The advantages of automatic mixing compared to manual mixing are also true for A-Silicone materials and can be nicely demonstrated with the new Express™ Penta™ Putty (test specimen on left) and a hand-kneaded specimen of Express™ STD Putty (test specimen on right).

Figure 13: Mixing quality of Express™ Penta™ Putty VPS Impression Material and Express™ STD Putty

The new Pentamix™ 2 System Components allow a homogeneous mixing quality free of voids and streaks despite the high paste viscosity of this material.

Summary

3M™ ESPE™ Pentamix™ 2 Automatic Mixing Unit, as successor to Pentamix™ Automatic Mixing Unit, offers the same simple and convenient handling at 1.5 times the speed as compared to the first generation Pentamix Automatic Mixing Unit. The accustomed high mixing quality of impression materials remains unchanged. The higher dispensing speed achieved is, however, a significant advantage in terms of a longer working time for all indications, and equally represents a substantial time saving. The Pentamix 2 System permits more relaxed and cost-effective work, and is intended as another step towards greater precision at lower cost.

By introducing the Penta™ Mixing Tip Red, the steel tube Penta cartridges and the new color coded and reinforced Penta foil bag front caps, the robustness and reliability of the whole Pentamix system was greatly enhanced. Also the spectrum of processable impression materials was expanded to real putty materials like the Express™ Penta™ Putty Vinyl Polysiloxane Impression Material.

Instructions for Use

Table of Contents

		Page
1.	Safety Instructions	18
2.	Description of the Product	18
3.	Technical Data	19
4.	Installation	19
5.	Functioning	20
5.1	Loading the Cartridge	21
5.2	Inserting the Cartridge	21
5.3	Attaching the Mixing Tip	21
5.4	Starting a New Cartridge	21
5.5	Loading the Impression Tray and Penta™ Elastomer Syringe	22
5.6	Re-starting a Partly Empty Cartridge	22
5.7	Exchanging a Cartridge	22
5.8	Disposal of Used-up Materials	22
6.	Failures	23
7.	Maintenance and Care	24
8.	Storing/Transport	24
9.	Customer Information	24
9.1	Warranty	25
9.2	Limitation of Liability	25

1. Safety Instructions

ATTENTION! Read these instructions carefully before plugging in and operating the unit!
As with all units, for safe operation, both the standard safety instructions and the special safety instructions in this operating manual must be carefully followed to ensure correct functioning and safety while operating.
3M ESPE guarantees trouble-free operation of the Pentamix™ System only if 3M ESPE system components are used exclusively.

1. The unit must only be used in strict accordance with the following instructions. 3M ESPE has no liability for any damages arising from any other or improper use of this unit.
2. Before the unit is put into operation, make sure that the operating voltage indicated on the rating plate matches the supply voltage available. Incorrect voltage may damage the unit.
3. A dangerous condition can result from condensation build-up. Before using the unit, allow the unit to reach room temperature, particularly when moving it from a colder to a warmer environment.
4. The power plug must be connected into a suitably grounded socket. If using an extension cable, make sure that the ground line is not interrupted.
5. The unit must be securely placed either on a flat non-skid surface or mounted to a stable, re-enforced wall.
6. Use only Penta materials in foil bags in combination with the Penta™ cartridges and Penta mixing tips, manufactured by 3M ESPE.
7. Close the cover of the Pentamix™ 2 Automatic Mixing Unit before operating.
8. Do not lock the start button. Continuous operation is hazardous.
9. Unplug the unit before changing the plunger discs.
10. When changing the plunger discs, you must position the smooth side of the new discs to coincide with the foil bag surface (the opposite side of the discs with a fan-shaped design should face toward the plunger rods). Otherwise the foil bag might be damaged.
11. In order to avoid any electrical shock, do not insert any objects into the unit, with the exception of such parts to be duly exchanged in accordance with these operating instructions.
12. Use only genuine 3M ESPE parts when replacing defective components as directed in these operating instructions. 3M ESPE has no liability for any damage caused by the use of non-3M ESPE parts or failure to fully comply with these operation instructions.
13. If, for any reason, it is possible that the safety of a unit has been compromised, that unit must be removed from operation and identified in such a way that it is not indadvertently operated again by a third party. For example, do not use unit if it does not work as specified or is visibly damaged.
14. Keep solvents, inflammable liquids and powerful heat sources away from the unit as these may damage the plastic housing.
15. Do not allow cleansers to get into the unit during cleaning; an electrical short or a dangerous malfunction may occur.
16. Only a properly trained, authorized technician should open the unit housing and repair the unit.

2. Description of the Product

Pentamix 2, manufactured by 3M ESPE, is an automatic mixing unit for processing of Penta™ Impression Materials. Penta impression materials, manufactured by 3M ESPE, were specifically designed for this device and are supplied in specialized foil bags. Only this form of packaging permits the use in the Pentamix device. Each Penta foil bag is sealed with a PentaMatic™ sealing cap. The external geometry of the sealing cap ensures proper positioning on the cartridge. After the Pentamix device is started up, a special internal device opens the foil bag once sufficient pressure is established by the plunger. The connection pieces located on the PentaMatic sealing caps serve for proper attachment of the mixing tip.

The cartridges, labeled like the product, and the PentaMatic™ sealing caps are the components of a mechanically sound unit for processing of pastes in the Pentamix™ device that allows a change of products without intermediate cleaning of the device and no loss of paste.

The Pentamix is supplied as a table-top unit, but can be converted into a wall mounted unit with the respective wall mounting brackets which can be ordered from 3M ESPE (Art.No. 077 600).

3. Technical Data

Drive unit:	2 motors with built-in automatic thermostat
Operating mode:	Short term operation - max.1.5 min. on, min.10 min. off prevents overheating of the electrical elements)
Cartridges:	Containers for Penta foil bags. Dimensions: 60 x 130 mm, 26.8 x 130 mm 2.4 x 5.1 inches, 1.1 x 5.1 inches respectively
Housing:	All parts of the housing are made of impact-resistant polycarbonate
Power supply:	120 V 230 V Please refer to rating plate
Frequency:	60 Hz 50 Hz for voltage and
Power input:	2.7A 1.5 A frequency.
Ambient temperatures:	18°C/64°F.....40°C/104°F
Rel. humidity of air:	20% 80%
Classification:	Hazard class I
Dimensions:	370 mm x 240 mm x 307mm
(L x W x H):	13.9 x 6.6 x 8 inches
Weight:	10.1 kg, 22,3 lbs

4. Installation

Prior to installing the unit, make sure the power supply corresponds to the supply quoted on the unit.
In order to work with the unit, the power plug must be connected into a suitably grounded socket. In case of using an extension cable make sure that the ground line is not interrupted.

- Pentamix™ 2 Automatic Mixing Unit from 3M ESPE can be placed on any non-skidding flat surface. After plugging into the powerline the unit is ready for use.
- The power cable (after having unscrewed the base of the unit), can be wound around the cable hooks at the bottom of the unit.
- Pentamix 2 Automatic Mixing Unit can also be mounted to a suitable wall. A special wall fixture is available and can be ordered from 3M ESPE (Art.No. 077 600).

5. Functioning

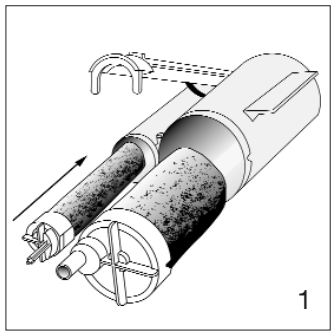

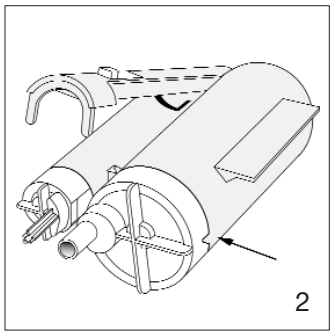

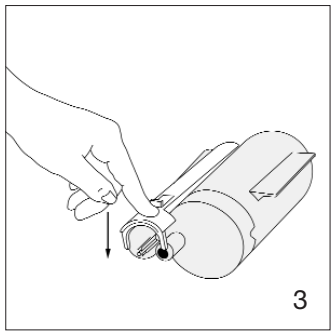

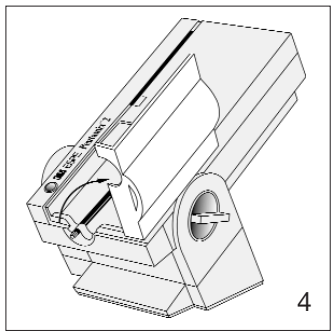

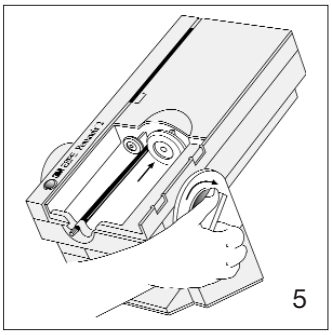

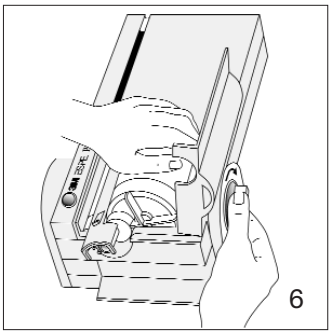

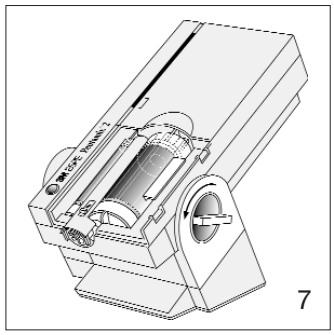

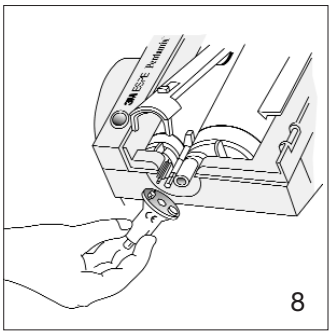

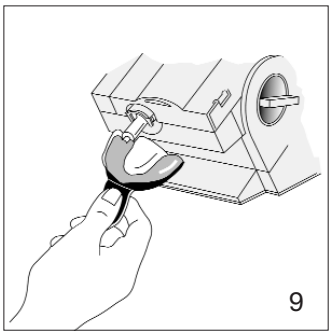

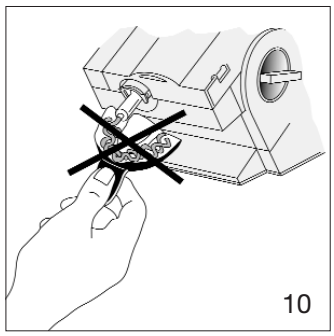

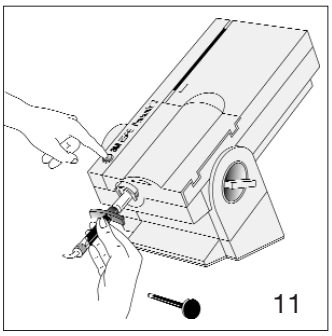

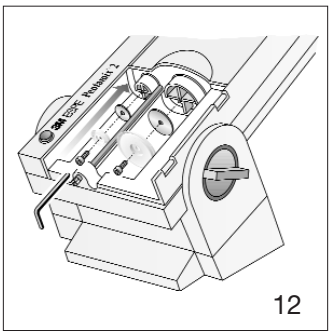

5.1 Loading the Cartridge

Please carry out the procedures in the following sequence.

- Prepare the foil bags of base paste and catalyst paste and the cartridge of the product to be used.
- Insert the foil bags from the front into the cartridge (Pict. 1).
- The locating lugs ensure correct fitting. (Pict. 2).
- Lock the lever for the mixing tip (Pict. 3).

5.2 Inserting the Cartridge

- Open the access door of the 3M™ ESPE™ Pentamix™ 2 Automatic Mixing Unit (Pict. 4).
- Take the cartridge in your left hand.
- Turn the plunger adjustment knob clockwise with your right hand until it stops and hold it in place.The plungers are now in the uppermost position (Pict. 5).
- Place the cartridge into the Pentamix 2 Automatic Mixing Unit (Pict. 6).
- Rotate the plunger adjustment knob anticlockwise until the plungers markedly touch the foil bags (Pict. 7).

The Pentamix 2 cannot be activated until the plungers touch the foil bags.

- Attach a mixing tip prior to beginning the mixing process (refer to next section).

5.3 Attaching the Mixing Tip. Always attach a mixing tip before use!

Foil bags equipped with a* PentaMatic™ *sealing cap exclusively must be used with Penta™ mixing tips.

- Open the access door of the Pentamix 2 Automatic Mixing Unit.
- Release the locking lever.
- Push the mixing tip over the drive shaft and then into the corresponding holes in the cartridges. It may be necessary to rotate the mixing tip slightly on the drive shaft for correct seating (Pict. 8).
- Press the locking lever down and lock into place.
- Close the access door of the Pentamix 2 Automatic Mixing Unit.

5.4 Starting a New Cartridge

When starting a new pair of foil bags, first of all the pressure in the cartridge has to build up evenly.

Both foil bags open automatically after some 15-25 seconds due to the pressure exerted by the plunger. This event is easy to hear. Catalyst and base paste bags may not open at exactly the same time.

Once the bags are open, one paste may flow out before the other paste producing an uneven mixing ratio. For this reason, always make sure to check whether both pastes flow into the mixer and **do not apply the paste until the mixture shows a homogeneous color.**

After mixing the mixing tip remains on the cartridge as a seal!

5.5 Loading the Impression Tray and Penta™ Elastomer Syringe

- Press the “start” button.
  Please note: A few seconds pass before the paste becomes visible in the mixing tip.

The Pentamix™ 2 Automatic Mixing Unit only functions as long as the “start” button is pressed. As soon as the button is released, the paste does not flow any more.

Do not arrest the “start” button to avoid continuous operation which might result in a dangerous situation. For safety reasons, use the Pentamix 2 Automatic Mixing Unit only with closed access door.

- Tilt the tray to load it. Fill the tray bottom continually from one end to the other, keeping the opening of the mixing tip immersed in the impression material (Pict. 9+10). If necessary, smooth the impression material with a spatula.
- A mixing tip may only be used as long as the mixing shaft inside the mixer rotates smoothly. If the mixing procedure is interrupted for more than 30 sec, the material inside the mixing tip begins to harden and a new mixing tip must be assembled (refer to 5.3 “Attaching the Mixing Tip”). If the mixer is operated while containing hardened material, the catalyst nipple of the sealing cap can be damaged or may break away.
- Put the Penta Elastomer Syringe, manufactured by 3M ESPE, (after removing the plunger) with its rear opening directly onto the mixing tip and press the “start” button (Pict.11).

CAUTION:
Not all Penta impression materials can be syringed. Please refer to the instructions for use of the respective product.

5.6 Re-starting a Partly Empty Cartridge

After prolonged storing (especially silicones) clean the openings of the cartridge caps from possible plugs using an instrument.

If necessary, start the unit without the mixer in order to control the flow of the paste. Attach a new mixing tip and start the mixing process.

The filling level indicator allows control of the filling quantity. The unit turns off automatically once it is completely empty:

5.7 Exchanging a Cartridge

If a cartridge is nearly empty, it is recommended to have a second cartridge at hand, ready for use, to be able to exchange quickly. This cartridge must be prepared as under 5.4 “Starting a New Cartridge”.

Trained staff can also exchange the cartridges while filling the tray. To do so and to save time, the full mixing tip of the emptied cartridge is attached to the prepared new cartridge.
Don’t forget to push down the plungers!

Utilisation capacity time of the mixing tip: refer to 5.5.

5.8 Diposal of Used-up Materials

Dispose of used mixers and emptied foil bags together with the regular household waste considering the local regulations.

6. Failures

Failure	Cause	Remedy
The unit will not run.	The plungers are either fully advanced or retracted.	Turn the plunger adjustment knob to move the plungers from their upper or lower limit.
The unit runs but does not extrude impression material.	Material has set in the mixing tip.	Attach a new mixing tip.
	The plungers are jammed.	Turn the plunger adjustment knob to check for smooth movement.
The paste flows too slowly or not at all.	The pastes are too cold, or sealing cap of the base paste is defective.	Allow the pastes to attain room temperature (at least 18 °C/65 °F). Replace defective foil bag.
Impression material is extruded but the rotor in the tip does not rotate.	The drive shaft has not engaged the mixing tip, it is stuck in its top position.	Remove the mixing tip. Turn the plungers several times up to their upper limit thus regaining axial movableness. Attach new mixing tip.
The cartridge will not fit into the unit.	The plungers are not fully retracted.	Turn the plungers up to their limit by turning the adjustment knob clockwise and arresting it. Check the plunger discs for damage.
	The cartridge receptacle is dirty.	Clean the cartridge receptacle.
The mixer does not switch off.	The “start” button is stuck.	Press the “start” button again or unplug the unit and free the “start” button.
The plungers are difficult to retract.	Foil bag is wedged between the cartridge and the plunger.	Retract plunger against the resistance but avoid damage of plunger discs.

7. Maintenance and Care

Exchanging the plunger discs:
Prior to exchanging the plunger discs the power plug must be disconnected.
For safety reasons only original accessories must be used.

- If damaged, the plunger discs must be replaced.To exchange, unscrew the screw in the centre of the plunger disc. Remove the disc and screw a new one into place (Pict. 12).

When exchanging the plunger discs, mount them with their smooth side towards the foil bag. Otherwise the foil bag might be damaged.

Care:

- Clean all components with a soft cloth and, if necessary, a mild detergent.
  For disinfection use commonly available disinfection sprays.
  Under no circumstances use solvents or scouring agents as they will permanently damage the plastic.
  Do not allow detergent or water to enter the mixing unit.
  The following agents can be used for disinfection:
  Pursept-A (Merz) and FD 322 (Dürr).
  Pursept-A and FD 322 are not available in all countries.

Please note:

- No components inside the unit require servicing or repairing by the user.
  3M ESPE will only take the responsibility for the safety, reliability and correct functioning of the mixer if:
  – Any modifications or repairs have only been carried out by personnel authorized to do so by the manufacturer,
  – the electrical installation complies with all regulatory requirements,
  – the mixer is operated according to these instructions.
- The plastic cartridges are, dependent on the frequency of being used, wearing parts and thus are not covered by the guarantee for this unit. They should be regularly checked as regards signs of wear and tear (e.g. fissures) and replaced with new ones every 2-4 years. The use of worn or faulty cartridges may result in damage of the foil bag or the plunger discs.

8. Storing/Transport

Store at -20 °C up to 60 °C/-4 °F up to 140 °F. The same temperatures apply for transport. Maximal rel. humidity of air: 80%.

9. Customer Information

No person is authorized to provide any information that deviates from the information provided in this instruction sheet.

9.1 Warranty

3M ESPE warrants this product will be free from defects in material and manufacture.
3M ESPE MAKES NO OTHER WARRANTIES INCLUDING ANY IMPLIED WARRANTY OF MERCHANTABILITY OR FITNESS FOR A PARTICULAR PURPOSE. User is responsible for determining the suitability of the product for user's application. If this product is defective within the warranty period, your exclusive remedy and 3M ESPE's sole obligation shall be repair or replacement of the 3M ESPE product.

9.2 Limitation of Liability

Except where prohibited by law, 3M ESPE will not be liable for any loss or damage arising from this product, whether direct, indirect, special, incidental or consequential, regardless of the theory asserted, including warranty, contract, negligence or strict liability.

Operating Instructions

3M ESPE

Pentamix™ 2

Automatic Mixing Unit

Automatisches Mischgerät

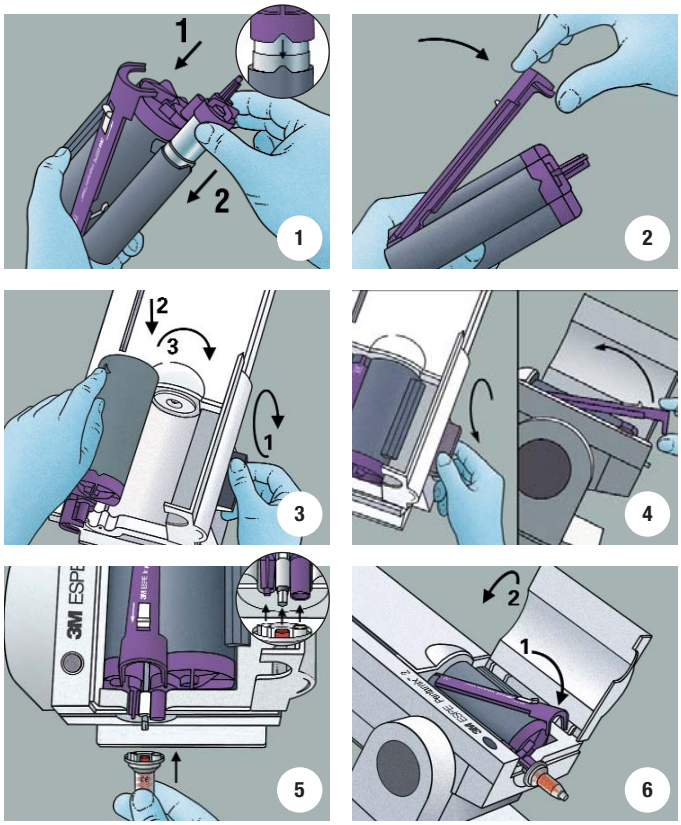

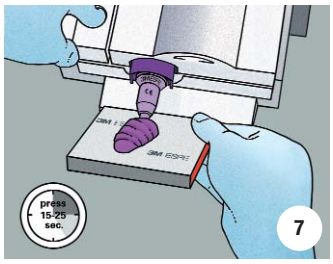

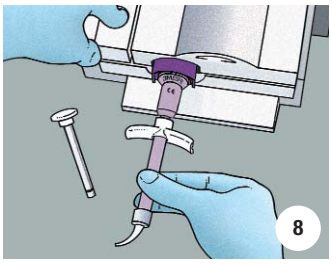

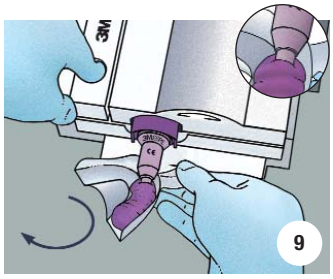

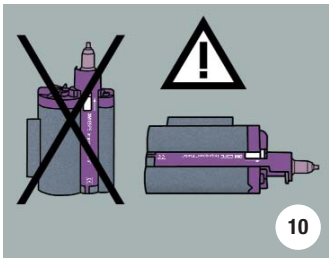

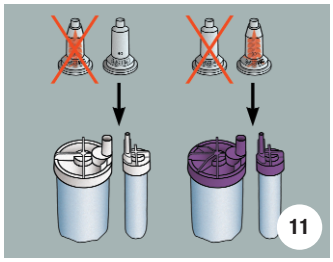

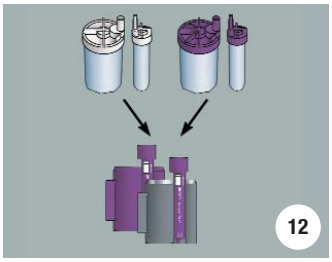

3M ESPE

3M ESPE
Dental Products
St. Paul,
MN 55144-1000

3M ESPE AG
Dental Products
82229 Seefeld
Germany

3M, ESPE, Impregum and Penta are trademarks of 3M or 3M ESPE.
© 3M ESPE 2004. Used under licence in Canada

44 0007 35108/01 (07.04)

3M™ ESPE™ PentaMatic™ Technology

With the objective of developing the best possible handling for the Penta™ Mixing System a self-opening mechanism was developed that automatically frees the contents of the foil bag as soon as the plunger disc exerts pressure on the bag.

When the Pentamix™ System is started the pressure within the foil bag increases and the foil stretches, lining the preformed cavity of the cartridge top (Figure 13). The spikes located there now pierce the hyperstretched foil and this results in complete rupture of the foil within the cavity. Release of the material is signalled by a clearly audible click.

With the Pentamix 1 system it takes about 20 - 25 seconds for the foil bag to open, and about 10 - 15 seconds with the Pentamix 2 system.

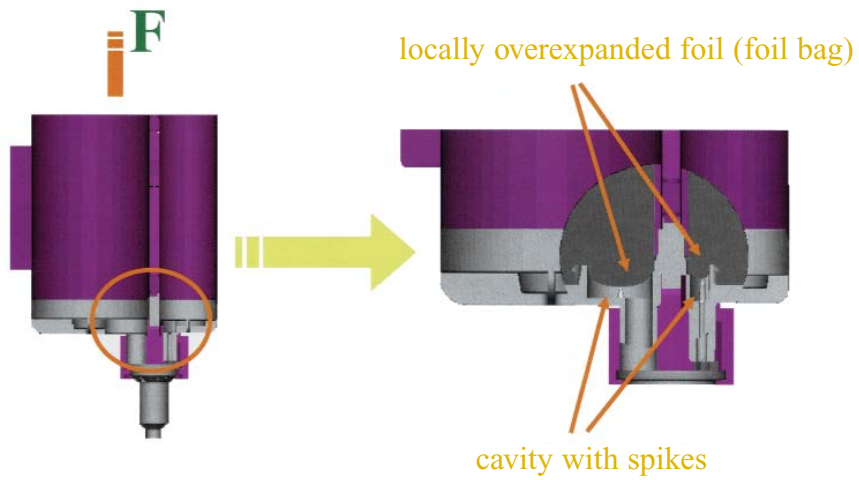

Figure 14: The basic PentaMatic™ Automatic Bag Opening Mechanism

Preparing the 3M™ ESPE™ Penta™ Materials

Loading the cartridges
Insert the 3M ESPE foil bags of base paste and catalyst paste fully into the **correct** 3M ESPE Penta cartridge. Close the cartridge locking lever by pressing it down.
To avoid any wastage, a second cartridge can be prepared before the foil bags in use run out. In this way, the cartridges can be changed while an impression tray is being filled and filling can continue.
The mixing tip can be removed from the empty cartridge and fitted onto the full cartridge. If a cartridge is not used for a considerable period the cartridge caps should be inspected before fitting a new mixing tip. Remove any blockage and discard approx. 1 - 2 cm of paste. Then fit a new mixing tip.
Storage: Loaded cartridges which have already been used should always be stored in a horizontal position. If they are stored vertically, air may enter and cause separation of the paste constituents.

Preparing of the 3M™ ESPE™ Pentamix™ 2 Automatic Mixing Unit

To insert the cartridge, open the access door. Turn the plunger adjustment knob clockwise to move the plunger to its uppermost position, and insert the cartridge.
Place the cartridge into the Pentamix 2 Automatic Mixing Unit. Using your right hand, turn the plunger adjustment knob anticlockwise until the plungers make contact with the foil bags.

- If the plungers are not in contact with the foil bags, this will delay dispensing of the impression material considerably.
- The inspection window on the unit allows the level of paste in the cartridges to be monitored.

To change the mixing tip, release the locking lever and remove the old mixing tip. First fit the new mixing tip onto the hexagonal drive shaft and then onto the corresponding cartridge outlets. Engage the locking lever and close the access door.

- Rotate the mixing tip gently to check that it has engaged properly with the drive shaft.
- The mixing tip is correctly positioned if the mark is visible.
- Always leave the mixing tip on the cartridge after use to act as an airtight seal!

Removing and refitting a used Penta™ Mixing Tip may transfer paste from one cartridge to the other and cause blockage.
After loading a new pair of 3M ESPE foil bags, dispense and discard a small quantity of paste (the size of a walnut), after which the dispensed paste must have a uniform colour.

- When you release the start button, you may hear a clicking sound. This is due to the power transmission to the clutch of the Pentamix motor being released.

Frequently asked questions

Pentamix™ 2 Automatic Mixing Unit: What to do when	Causes	Solutions
Unit does not start	Plunger is in bottom position	Turn adjustment knob to move plunger from this position
Paste not conveyed	1. Cartridge is empty 2. Foil bag openings glued up with contamination material 3. Plunger is jammed	1. Insert new foil bags 2. Clean foil bag openings 3. Check adjustment knob for easy movement
Unit does not switch off	Start button is jammed	Press start button again, if necessary remove main plug and release start button
Paste flows too slowly or not at all	Paste temperature too low	Bring up to room temperature, min. 18 °C
Cartridge cannot be inserted in unit	1. Plungers not in top position 2. Cartridge locking lever not closed	1. Move up plungers by turning the adjustment knob clock-wise as far as it will go and hold 2. Close cartridge locking lever
Material initially conveyed not homogeneous in color	There has been a minimal change in the length of the foil bags through the cartridges being stored vertically outside the unit	1. Store cartridges horizontally 2. Always check mixing result for a uniform shade, typical of paste

More impression material related FAQ's can be found in the respective Technical Product Profiles (e.g. Express™ Penta™ Putty Vinyl Polysiloxane Impression Material, Impregum™ Penta™ Soft (Quick) Polyether Impression Material, and in the 3M™ ESPE™ guideline on precision impressioning (see reference list).

Packaging Types

3M™ ESPE™ Pentamix™ Automatic Mixing Unit

Art.No.	Packaging type	Content
077 959	Pentamix™ 2 230 V int.	1 Pentamix™ 2 mixing unit 230 V int. Operating instructions, Instructions for Use
077 961	Pentamix™ 2 230 V CH	1 Pentamix™ 2 mixing unit 230 V CH Operating instructions, Instructions for Use
077 963	Pentamix™ 2 230 V GB	1 Pentamix™ 2 mixing unit 230 V GB Operating instructions, Instructions for Use
077 964	Pentamix™ 2 230 V NZ/AUS	1 Pentamix™ 2 mixing unit 230 V NZ/AUS Operating instructions, Instructions for Use
077 965	Pentamix™ 2 120 V USA	1 Pentamix™ 2 mixing unit 120 V USA Operating instructions, Instructions for Use
077 966	Pentamix™ 2 100 V/ 60 Hz J	1 Pentamix™ 2 mixing unit 100 V/ 60 Hz Japan Operating instructions, Instructions for Use
077 967	Pentamix™ 2 100 V/ 50 Hz J	1 Pentamix™ 2 mixing unit 100 V/ 50 Hz Japan Operating instructions, Instructions for Use
077 952	Pentamix™ 2 230 V/ 60 Hz J	1 Pentamix™ 2 mixing unit 230 V/ 60 Hz Korea/ Saudi Arabia, Operating instructions, Instructions for Use
Penta™ System Accessories		
077 600	Pentamix™ 2 Wall mounting	1 Pentamix™ 2 wall mounting
071 210	Penta™ Elastomer syringe	1 Penta™ Elastomer syringe, complete
071 200	Penta™ Elastomer spare barrels	10 spare barrels for Penta™ Elastomer syringe
071 225	Penta™ Elastomer application tips	12 application tips medium viscosity for Penta™ Elastomer syringe
071 220	Penta™ Elastomer knurled nut	1 knurled nut for Penta™ Elastomer syringe
077 780	Pentamix™ plunger discs	1 pair Pentamix™ plunger discs
071 512	Penta™ Mixing Tip RED	50 Penta™ mixing tips RED
071 510	Penta™ Mixing Tip	50 Penta™ mixing tips

Bibliography

P. Pospiech, P. Rammelsberg,
"Zur Abformung mit Polyätherabformmassen – Erste klinische Erfahrungen mit dem Pentamix-Gerät", Die Quintessenz, Juli 1994

M. A. Wilson, N. H. F. Wilson,
"The Impregum Penta / Pentamix System, Impressions over 12 months",
Dental Practice, February 1996

B. Millon,
"An update on elastomeric impression materials",
Dental News, Vol II No. II, p.17, 1995.

P. Bissinger, E. Wanek, J. Zech,
"Polyether carbosilanes – a new class of wetting agents for impression materials",
Abtract No. 3268, JDR, Vol. 76, 1997.

E. Trübenbach,
"Präzise, schnell, wirtschaftlich. Das neuartige A-Silikon-Abformmaterial Dimension von ESPE im Praxis- und Labortest." Dental Magazin 1/ 1996.

B. Wöstmann,
"Accuracy of impressions obtained with the Pentamix automixing system",
Abstract No. 1004, IADR-Vortrag, Orlando 1997.

B. Wöstmann, P. Ferger,
"Clinical parameters influencing impression taking."
CED-Vortrag Madrid, 1997.

M. Wildenhain, P. Pospiech, P. Rammelsberg, W. Gernet,
"Properties of elastomeric impression materials using automix technique",
Abstract No. 1062, IADR-Vortrag, 1998

P. Pospiech, M. Wildenhain,
"Zur Frage der Anmischung von Polyetherabformstoffen – Ein Vergleich zwischen Hand und dynamischer Mischung", Dental Spiegel 5/98

3M ESPE AG (Ed.),
"Precision Impression – A Guideline for Theory and Practice", 62, 2nd edition 2002.

G. J. Christensen
Dental Economics, April 2002

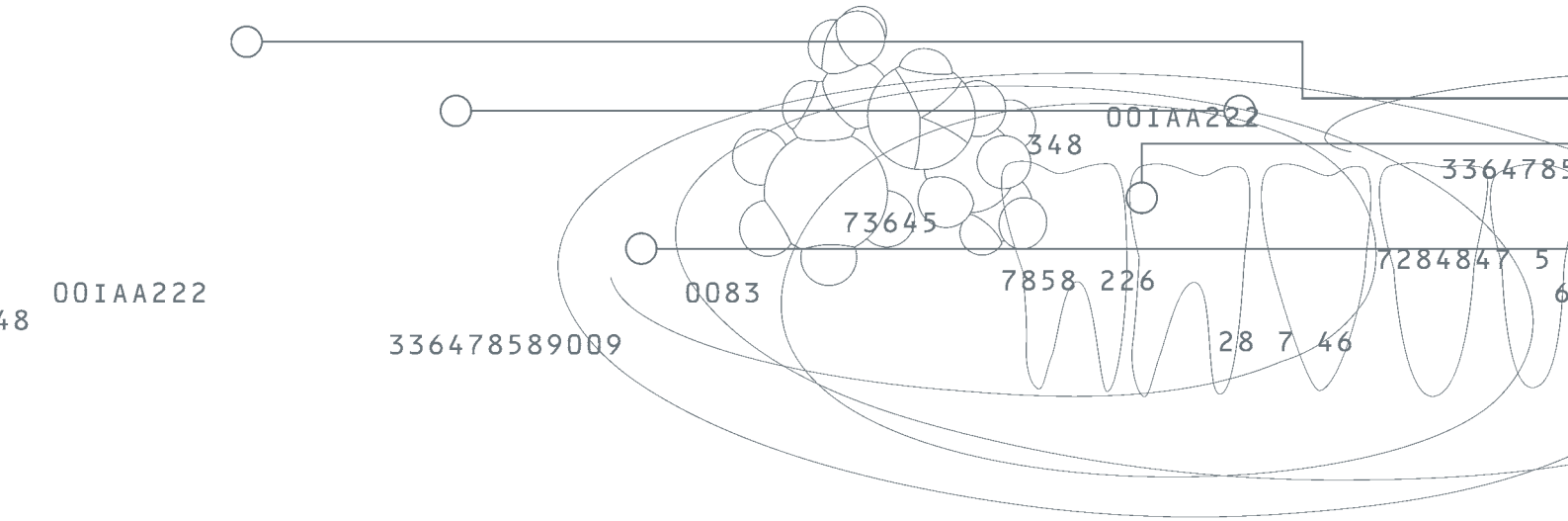

3M ESPE

3M ESPE AG · ESPE Platz
82229 Seefeld · Germany
E-mail: info3mespe@mmm.com
Internet: http://www.3mespe.com

3M, ESPE, DuoSoft, Express, Garant, Impregum, Penta, PentaMatic, Pentamix, Permadyne, Ramitec are trademarks of 3M or 3M ESPE AG.

©3M 2005. All rights reserved

70200949421/01(9.2005)